MAIL TO:

STATE OF UTAH
DIVISION OF PURCHASING
3150 STATE OFFICE BUILDING, CAPITOL HILL
P.O. BOX 141061
SALT LAKE CITY, UTAH 84114-1061
TELEPHONE (801) 538-3026
http://purchasing.utah.gov

Invitation to Bid

Solicitation Number: **PM5030**

Due Date: **09/14/04 at 2:00 P.M.**
.

Date Sent: August 30, 2004

Goods and services to be **RECLAMATION CONSTRUCTION FOR THE DEPARTMENT OF NATURAL RESOURCES**

Please complete

Company Name		Federal Tax Identification Number	
Ordering Address	City	State	Zip Code
Remittance Address (if different from ordering address)	City	State	Zip Code
Type ☐ Corporation ☐ Partnership ☐ Proprietorship Government	Company Contact Person		
Telephone Number (include area code)	Fax Number (include area code)		
Company's Internet Web Address	Email Address		
Discount Terms (for bid purposes, bid discounts less than 30 days will not be considered)	Days Required for Delivery After Receipt of Order (see attached for any required minimums)		

The following documents are included in this solicitation: Solicitation forms, instructions and general provisions, and specifications. Please review all documents carefully before completing.

The undersigned certifies that the goods or services offered are produced, mined, grown, manufactured, or performed in Utah. Yes_____ No_____. If no, enter where produced, etc._____

Offeror's Authorized Representative's Signature	Date
Type or Print Name	Position or Title

STATE OF UTAH
DIVISION OF PURCHASING

Invitation to Bid

Solicitation Number: **PM5030**

Due Date: **09/14/04**

Vendor Name:

DESCRIPTION
RECLAMATION CONSTRUCTION FOR THE DIVISION OF OIL, GAS AND MINING (DOGM). PROJECT NAME: WHITE OAK MINE PROJECT; AMR/007/934. WORK CONSISTS OF EARTHWORK, GUARD RAIL DEMOLITION, STREAM RESTORATION AND REVEGETATION AT THE ABANDONED MINES SITES IN WHISKEY CREEK CANYON, CARBON COUNTY, UTAH. DETAILS OF WORK CONTAINED IN SPECIFICATIONS TITLED: 'WHITE OAK MINE PROJECT CONSTRUCTION SPECIFICATIONS'. SPECS AVAILABLE FROM DOGM FOR A $20.00 FEE. CALL LOUIS AMODT AT (801) 538-5360, DOGM FOR INFORMATION. OPTIONAL PRE-BID SITE MEETING IS ON SEPTEMBER 7, AT 10:00 A.M. AT THE MINE ENTRANCE 4.1 MILES SOUTH OF SCOFIELD, UTAH. A 5% BID SECURITY & 100% PERFORMANCE/PAYMENT BOND IS REQUIRED. WITH TECHNICAL QUESTIONS OR FOR CLARIFICATION PLEASE CONTACT LOUIS AMODT AT 801-538-5360. WITH PURCHASING QUESTIONS OR FOR CLARIFICATION PLEASE CONTACT PAUL MASH AT 801-538-3138. ********** REFERENCE RX: 560 52000000003; COMMODITY CODE(S): 96273000000

INVITATION TO BID - INSTRUCTION AND GENERAL PROVISIONS

1. BID PREPARATION: (a) All prices and notations must be in ink or typewritten. (b) Price each item separately. Unit price shall be shown and a total price shall be entered for each item bid. Errors may be crossed out and corrections printed in ink or typewritten adjacent and must be initialed in ink by person signing quotation. (c) Unit price will govern, if there is an error in the extension. (d) Delivery time is critical and must be adhered to as specified. (e) Wherever in this document an item is defined by using a trade name of a manufacturer and/or model number, it is intended that the words, "or equivalent" apply. "Or equivalent" means any other brand that is equal in use, quality, economy and performance to the brand listed as determined by the Division of Purchasing & General Services (DIVISION). If the vendor lists a trade name and/or catalog number in the bid, the DIVISION will assume the item meets the specifications unless the bid clearly states it is an alternate, and describes specifically how it differs from the item specified. All bids must include complete manufacturer's descriptive literature if quoting an equivalent product. All products are to be of new, unused condition, unless otherwise requested in this solicitation. (f) By signing the bid the vendor certifies that all of the information provided is accurate, that they are willing and able to furnish the item(s) specified, and that prices quoted are correct. (g) This bid may not be withdrawn for a period of 60 days from bid due date.

2. SUBMITTING THE BID: (a) The bid must be signed in ink, sealed in a properly-addressed envelope, and either mailed or delivered to the DIVISION OF PURCHASING, 3150 State Office Building, Capitol Hill, Salt Lake City, UT 84114-1061 by the "Due Date and Time." **The "Bid Number" and "Due Date" must appear on the outside of the envelope.** (b) Bids, modifications, or corrections received after the closing time on the "Due Date" will be considered late and handled in accordance with the Utah Procurement Rules, section R33-3-109. (c) **Your bid will be considered only if it is submitted on the forms provided by the state. Facsimile transmission of bids to DIVISION will not be considered.** (d) All prices quoted must be both F.O.B. Origin per paragraph 1.(c) and F.O.B. Destination. Additional charges including but not limited to delivery, drayage, express, parcel post, packing, cartage, insurance, license fees, permits, costs of bonds, or for any other purpose must be included in the bid for consideration and approval by the DIVISION. Upon award of the contract, the shipping terms will be F.O.B. Destination, Freight Prepaid with freight charges to be added to the invoice unless otherwise specified by the DIVISION.

3. SOLICITATION AMENDMENTS: All changes to this solicitation will be made through written addendum only. Bidders are cautioned not to consider verbal modifications.

4. PROPRIETARY INFORMATION: Suppliers are required to mark any specific information contained in their bid which is not to be disclosed to the public or used for purposes other than the evaluation of the bid. Each request for nondisclosure must to be accompanied by a specific justification explaining why the information is to be protected. Pricing and service elements of any bid will not to be considered proprietary. Bids submitted may to be reviewed and evaluated by any persons at the discretion of the state.

5. SAMPLES: Samples of item(s) specified in this bid, when required by DIVISION, must to be furnished free of charge to DIVISION. Any item not destroyed by tests may, upon request made at the time the sample is furnished, to be returned at the bidder's expense.

6. WARRANTY: The contractor agrees to warrant and assume responsibility for all products (including hardware, firmware, and/or software products) that it licenses, contracts, or sells to the State of Utah under this contract for a period of one year, unless otherwise specified and mutually agreed upon elsewhere in this contract. The contractor (seller) acknowledges that all warranties granted to the buyer by the Uniform Commercial Code of the State of Utah applies to this contract. Product liability disclaimers and/or warranty disclaimers from the seller are not applicable to this contract unless otherwise specified and mutually agreed upon elsewhere in this contract. In general, the contractor warrants that: (1) the product will do what the salesperson said it would do, (2) the product will live up to all specific claims that the manufacturer makes in their advertisements, (3) the product will be suitable for the ordinary purposes for which such product is used, (4) the product will be suitable for any special purposes that the State has relied on the contractor's skill or judgement to consider when it advised the State about the product, (5) the product has been properly designed and manufactured, and (6) the product is free of significant defects or unusual problems about which the State has not been warned. Remedies available to the State include the following: The contractor will repair or replace (at no charge to the State) the product whose nonconformance is discovered and made known to the contractor in writing. If the repaired and/or replaced product proves to be inadequate, or fails of its essential purpose, the contractor will refund the full amount of any payments that have been made. Nothing in this warranty will be construed to limit any rights or remedies the State of Utah may otherwise have under this contract.

7. DIVISION APPROVAL: Purchase orders placed, or contracts written, with the state of Utah, as a result of this bid, will not to be legally binding without the written approval of the director of the DIVISION.

8. AWARD OF CONTRACT: (a) the contract will to be awarded with reasonable promptness, by written notice, to the lowest responsible bidder that meets the specifications. Consideration will to be given to the quality of the product(s) to be supplied, conformity to the specifications, the purpose for which required, delivery time required, discount terms and other criteria set forth in this invitation to bid. (b) The bids are opened publicly in the presence of one or more witnesses. the name of each bidder, and the amount of the bid is recorded. Each bid, and the record, is open to public inspection. (c) The DIVISION may accept any item or group of items, or overall low bid. the DIVISION has the right to cancel this invitation to bid at any time prior to the award of contract. (d) The DIVISION can reject any and all bids. And it can waive any informality, or technicality in any bid received, if the DIVISION believes it would serve the best interest of the State. (e) Before, or after, the award of a contract the DIVISION has the right to inspect the bidder's premises and all business records to determine the holder's ability to meet contract requirements. (f) DIVISION does not guarantee to make any purchase under awarded contract(s). Estimated quantities are for bidding purposes only, and not to be interpreted as a guarantee to purchase any amount. (g) Utah has a reciprocal preference law which will to be applied against bidders bidding products or services produced in states which discriminate against Utah products. For details see Section 63-56 20.5 -20.6, Utah Code Annotated.

9. ANTI-DISCRIMINATION ACT: The bidder agrees to abide by the provisions of the Utah Anti-discrimination Act, Title 34 Chapter 35, U.C.A. 1953, as amended, and Title VI and Title VII of the Civil Rights Act of 1964 (42 USC 2000e), which prohibit discrimination against any employee or applicant for employment, or any applicant or recipient of services, on the basis of race, religion, color, or national origin; and further agrees to abide by Executive Order No. 11246, as amended, which prohibits discrimination on the basis of sex; 45 CFR 90 which prohibits discrimination on the basis of age, and Section 504 of the Rehabilitation Act of 1973 or the Americans with Disabilities Act of 1990, which prohibits discrimination on the basis of disabilities. Also bidder agrees to abide by Utah's Executive Order, dated March 17, 1993, which prohibits sexual harassment in the workplace. Vendor must include this provision in every subcontract or purchase order relating to purchases by the State of Utah to insure that the subcontractors and vendors are bound by this provision.

10. DEBARMENT: The CONTRACTOR certifies that neither it nor its principals are presently debarred, suspended, proposed for debarment, declared ineligible, or voluntarily excluded from participation in this transaction (contract) by any governmental department or agency. If the CONTRACTOR cannot certify this statement, attach a written explanation for review by the STATE.

11. GOVERNING LAWS AND REGULATIONS: All state purchases are subject to the Utah Procurement Code, Title 63 Chapter 56 U.C.A. 1953, as amended, and the Procurement Regulations as adopted by the Utah State Procurement Policy Board. These are available on the Internet at www.purchasing.utah.gov

(Revision 14 Mar 2003 - IFB Instructions)

ATTACHMENT A: STANDARD TERMS AND CONDITIONS

1. **AUTHORITY:** Provisions of this contract are pursuant to the authority set forth in 63-56, Utah Code Annotated, 1953, as amended, Utah State Procurement Rules (Utah Administrative Code Section R33), and related statutes which permit the State to purchase certain specified services, and other approved purchases for the State.

2. **CONTRACT JURISDICTION, CHOICE OF LAW, AND VENUE:** The provisions of this contract shall be governed by the laws of the State of Utah. The parties will submit to the jurisdiction of the courts of the State of Utah for any dispute arising out of this Contract or the breach thereof. Venue shall be in Salt Lake City, in the Third Judicial District Court for Salt Lake County.

3. **LAWS AND REGULATIONS:** Any and all supplies, services and equipment furnished will comply fully with all applicable Federal and State laws and regulations.

4. **RECORDS ADMINISTRATION:** The Contractor shall maintain, or supervise the maintenance of all records necessary to properly account for the payments made to the Contractor for costs authorized by this contract. These records shall be retained by the Contractor for at least four years after the contract terminates, or until all audits initiated within the four years, have been completed, whichever is later. The Contractor agrees to allow State and Federal auditors, and State Agency Staff, access to all the records to this contract, for audit and inspection, and monitoring of services. Such access will be during normal business hours, or by appointment.

5. **CONFLICT OF INTEREST:** Contractor represents that none of its officers or employees are officers or employees of the State of Utah, unless disclosure has been made in accordance with 67-16-8, Utah Code Annotated, 1953, as amended.

6. **CONTRACTOR, AN INDEPENDENT CONTRACTOR:** The Contractor shall be an independent contractor, and as such, shall have no authorization, express or implied, to bind the State to any agreements, settlements, liability, or understanding whatsoever, and agrees not to perform any acts as agent for the State, except as herein expressly set forth. Compensation stated herein shall be the total amount payable to the Contractor by the State. The Contractor shall be responsible for the payment of all income tax and social security amounts due as a result of payments received from the State for these contract services. Persons employed by the State and acting under the direction of the State shall not be deemed to be employees or agents of the Contractor.

7. **INDEMNITY CLAUSE:** The Contractor agrees to indemnify, save harmless, and release the State OF UTAH, and all its officers, agents, volunteers, and employees from and against any and all loss, damages, injury, liability, suits, and proceedings arising out of the performance of this contract which are caused in whole or in part by the negligence of the Contractor's officers, agents, volunteers, or employees, but not for claims arising from the State's sole negligence.

8. **EQUAL OPPORTUNITY CLAUSE:** The Contractor agrees to abide by the provisions of Title VI and VII of the Civil Rights Act of 1964 (42USC 2000e) which prohibits discrimination against any employee or applicant for employment or any applicant or recipient of services, on the basis of race, religion, color, or national origin; and further agrees to abide by Executive Order No. 11246, as amended, which prohibits discrimination on the basis of sex; 45 CFR 90 which prohibits discrimination on the basis of age; and Section 504 of the Rehabilitation Act of 1973, or the Americans with Disabilities Act of 1990 which prohibits discrimination on the basis of disabilities. Also, the Contractor agrees to abide by Utah's Executive Order, dated March 17, 1993, which prohibits sexual harassment in the work place.

9. **SEPARABILITY CLAUSE:** A declaration by any court, or any other binding legal source, that any provision of this contract is illegal and void shall not affect the legality and enforceability of any other provision of this contract, unless the provisions are mutually dependent.

10. **RENEGOTIATION OR MODIFICATIONS:** This contract may be amended, modified, or supplemented only by written amendment to the contract, executed by the same persons or by persons holding the same position as persons who signed the original agreement on behalf of the parties hereto, and attached to the original signed copy of the contract.

11. **DEBARMENT:** The Contractor certifies that neither it nor its principals are presently debarred, suspended, proposed for debarment, declared ineligible, or voluntarily excluded from participation in this transaction (contract), by any governmental department or agency. If the Contractor cannot certify this statement, attach a written explanation for review by the State. The Contractor must notify the State Director of Purchasing within 30 days if debarred by any governmental entity during the Contract period.

12. **TERMINATION:** Unless otherwise stated in the Special Terms and Conditions, this contract may be terminated, with cause by either party, in advance of the specified termination date, upon written notice being given by the other party. The party in violation will be given ten (10) working days after notification to correct and cease the violations, after which the contract may be terminated for cause. This contract may be terminated without cause, in advance of the specified expiration date, by either party, upon 90 days prior written notice being given the other party. On termination of this contract, all accounts and payments will be processed according to the financial arrangements set forth herein for approved services rendered to date of termination.

13. **NONAPPROPRIATION OF FUNDS:** The Contractor acknowledges that the State cannot contract for the payment of funds not yet appropriated by the Utah State Legislature. If funding to the State is reduced due to an order by the Legislature or the Governor, or is required by State law, or if federal funding (when applicable) is not provided, the State may terminate this contract or proportionately reduce the services and purchase obligations and the amount due from the State upon 30 days written notice. In the case that funds are not appropriated or are reduced, the State will reimburse Contractor for products delivered or services performed through the date of cancellation or reduction, and the State will not be liable for any future commitments, penalties, or liquidated damages.

14. **SALES TAX EXEMPTION:** The State of Utah's sales and use tax exemption number is E33399. The tangible personal property or services being purchased are being paid from State funds and used in the exercise of that entity's essential functions. If the items being purchased are construction materials, they will be converted into real property by employees of this government entity, unless otherwise stated in the contract.

15. **WARRANTY:** The contractor agrees to warrant and assume responsibility for all products (including hardware, firmware, and/or software products) that it licenses, contracts, or sells to the State of Utah under this contract for a period of one year, unless otherwise specified and mutually agreed upon elsewhere in this contract. The contractor (seller) acknowledges that all warranties granted to the buyer by the Uniform Commercial Code of the State of Utah apply to this contract. Product liability disclaimers and/or warranty disclaimers from the seller are not applicable to this contract unless otherwise specified and mutually agreed upon elsewhere in this contract. In general, the contractor warrants that: (1) the product will do what the salesperson said it would do, (2) the product will live up to all specific claims that the manufacturer makes in their advertisements, (3) the product will be suitable for the ordinary purposes for which such product is used, (4) the product will be suitable

for any special purposes that the State has relied on the contractor's skill or judgment to consider when it advised the State about the product, (5) the product has been properly designed and manufactured, and (6) the product is free of significant defects or unusual problems about which the State has not been warned. Remedies available to the State include the following: The contractor will repair or replace (at no charge to the State) the product whose nonconformance is discovered and made known to the contractor in writing. If the repaired and/or replaced product proves to be inadequate, or fails of its essential purpose, the contractor will refund the full amount of any payments that have been made. Nothing in this warranty will be construed to limit any rights or remedies the State of Utah may otherwise have under this contract.

16. **PUBLIC INFORMATION:** Contractor agrees that the contract will be a public document, and may be available for distribution. and Contractor gives the State express permission to make copies of the contract and/or of the response to the solicitation in accordance with the State of Utah Government Records Access and Management Act. The permission to make copies as noted will take precedence over any statements of confidentiality, proprietary information, copyright information, or similar notation.

17. **DELIVERY:** Unless otherwise specified in this contract, all deliveries will be F.O.B. destination with all transportation and handling charges paid by the Contractor. Responsibility and liability for loss or damage will remain with Contractor until final inspection and acceptance when responsibility will pass to the State except as to latent defects, fraud and Contractor's warranty obligations.

18. **ORDERING AND INVOICING:** All orders will be shipped promptly in accordance with the delivery schedule. The Contractor will promptly submit invoices (within 30 days of shipment or delivery of services) to the State. The State contract number and/or the agency purchase order number shall be listed on all invoices, freight tickets, and correspondence relating to the contract order. The prices paid by the State will be those prices listed in the contract. The State has the right to adjust or return any invoice reflecting incorrect pricing.

19. **PAYMENT:** Payments are normally made within 30 days following the date the order is delivered or the date a correct invoice is received, whichever is later. All payments to the Contractor will be remitted by mail unless paid by the State of Utah's Purchasing Card.

20. **PATENTS, COPYRIGHTS, ETC.:** The Contractor will release, indemnify and hold the State, its officers, agents and employees harmless from liability of any kind or nature, including the Contractor's use of any copyrighted or un-copyrighted composition, secret process, patented or un-patented invention, article or appliance furnished or used in the performance of this contract.

21. **ASSIGNMENT/SUBCONTRACT:** Contractor will not assign, sell, transfer, subcontract or sublet rights, or delegate responsibilities under this contract, in whole or in part, without the prior written approval of the State.

22. **DEFAULT AND REMEDIES:** Any of the following events will constitute cause for the State to declare Contractor in default of the contract: 1. Nonperformance of contractual requirements; 2. A material breach of any term or condition of this contract. The State will issue a written notice of default providing a ten (10) day period in which Contractor will have an opportunity to cure. Time allowed for cure will not diminish or eliminate Contractor's liability for damages. If the default remains, after Contractor has been provided the opportunity to cure, the State may do one or more of the following: 1. Exercise any remedy provided by law; 2. Terminate this contract and any related contracts or portions thereof; 3. Impose liquidated damages, if liquidated damages are listed in the contract; 4. Suspend Contractor from receiving future solicitations.

23. **FORCE MAJEURE:** Neither party to this contract will be held responsible for delay or default caused by fire, riot, acts of God and/or war which is beyond that party's reasonable control. The State may terminate this contract after determining such delay or default will reasonably prevent successful performance of the contract.

24. **PROCUREMENT ETHICS**: The Contractor understands that a person who is interested in any way in the sale of any supplies, services, construction, or insurance to the State of Utah is violating the law if the person gives or offers to give any compensation, gratuity, contribution, loan or reward, or any promise thereof to any person acting as a procurement officer on behalf of the State, or who in any official capacity participates in the procurement of such supplies, services, construction, or insurance, whether it is given for their own use or for the use or benefit of any other person or organization (63-56-73, Utah Code Annotated, 1953, as amended).

25. **CONFLICT OF TERMS:** Contractor Terms and Conditions that apply must be in writing and attached to the contract. No other Terms and Conditions will apply to this contract including terms listed or referenced on a Contractor's website, terms listed in a Contractor quotation/sales order, etc. In the event of any conflict in the contract terms and conditions, the order of precedence shall be: 1. State Standard Terms and Conditions; 2. State Special Terms and Conditions; 3. Contractor Terms and Conditions.

(Revision date: Nov 21, 2003)

White Oak Mine Project

CONSTRUCTION SPECIFICATIONS

AMR/007/934

Fall 2004

Requisition Number RX 560 52000000003

==========

Carbon County, UTAH

==========

UTAH NATURAL RESOURCES
Abandoned Mine Reclamation Program
Salt Lake City, Utah

Copy of 30***

****** This is NOT a standard DFCM Specification Package ******

STATE OF UTAH
DEPARTMENT OF NATURAL RESOURCES
DIVISION OF OIL, GAS & MINING
ABANDONED MINE RECLAMATION PROGRAM

The Utah Department of Natural Resources receives federal aid and prohibits discrimination on the basis of race, color, sex, age, national origin, or handicap. For information or complaints regarding discrimination, contact Executive Director, Utah Department of Natural Resources, P.O. Box 145610, Salt Lake City, Utah 84114-5610 or Office of Equal Opportunity, U.S. Department of the Interior, Washington, D.C. 20240

Completed Date: August 27, 2004
Document Filename: O:\Projects\007Carbon\934WhiteOak\Construction_AMR\WhiteOakSpecs.doc
Revised:

CONSTRUCTION SPECIFICATIONS FOR

WHITE OAK MINE PROJECT

RECLAMATION CONSTRUCTION

Carbon County, UTAH

Requisition Number RX 560 52000000003

State of Utah

Department of Natural Resources
Division of Oil, Gas and Mining
Abandoned Mine Reclamation Program
1594 West North Temple, Suite 1210
P.O. Box 145801
Salt Lake City, Utah 84114-5801
(801) 538-5340
http://www.ogm.utah.gov/amr/contract.htm

****** This is NOT a standard DFCM Specification Package ******

Table Of Contents

Project Summary And Bidding Check List i
Instructions To Bidders i

PROPOSAL AND BID SCHEDULES (Yellow Pages)
Proposal 1
Agency Contract Bond Statement 1
Bid Bond 1
Bidder's Proposed Subcontractors, Suppliers & Vendors List 1
Minority And Woman Business Enterprise Representation 1
Applicant/Violator System Eligibility Check 1
Bid Schedule 1

CONTRACT (Orange Pages)
Performance Bond 1
Payment Bond 1
Certificate Of Substantial Completion 1
Certificate Of Final Acceptance 1

GENERAL CONDITIONS (White Pages)
General Conditions 1
Supplemental General Conditions 1

TECHNICAL SPECIFICATIONS (Blue Pages)
0200 General Site Information 1
0220 Mobilization/Demobilization 1
0230 Access Improvements 1
0240 Demolition And Clean-Up 1
0250 Mine Closures 1
0251 Cast-In-Place Concrete 1
0252 Concrete Reinforcement 1
0253 Bat Gate & Shaft Grate Installation 1
0254 Polyurethane Foam Mine Closures 1
0270 Site Grading/Earthwork 1
0280 Drainage Control & Stream Protection 1
0290 Revegetation 1

0300 Specific Site Requirements (Gray Pages) 1

APPENDICES
Appendix A: Revegetation Seed Mixture
Appendix B: Earthwork Schedule
Appendix C: Contractor Report Forms
Appendix D: Project Location and Site Maps
Appendix E: Standard Mine Closure Design Drawings

Project Summary And Bidding Check List

Sealed bids will be received by the Division of Purchasing, 3150 State Office Building, Salt Lake City, for the WHITE OAK RECLAMATION CONSTRUCTION in Carbon County, Utah. Bids will be received until 2:00 p.m., on Tuesday, September 14, 2004, at which time they will be opened and read aloud in the Division of Purchasing offices.

The WORK consists of reclamation construction at an abandoned coal mine located in Carbon County, Utah. The work includes earthwork, demolition of guard railing, stream restoration, revegetation of disturbed areas, and incidental tasks such as access improvement. Details of the WORK are contained in these Specifications.

Specifications may be obtained from the Division of Oil, Gas, and Mining, 1594 West North Temple, Suite 1210, Salt Lake City, for a nonrefundable fee of twenty dollars ($20.00). Checks should be made payable to the Division of Oil, Gas and Mining.

AN OPTIONAL PRE-BID MEETING WILL BE HELD FOR ALL BIDDERS ON TUESDAY, SEPTEMBER 7, 2004. Meet at the turnoff to the mine, south of the town of Scofield on SR 96 2.8 miles, then west on SR 264 (Eccles Canyon) 1.3 miles at **10:00 A.M.** The meeting is expected to last most of the day and will involve driving and hiking over rugged terrain. High clearance four-wheel-drive vehicles are recommended. This meeting is optional. *Because of the special nature of abandoned mine closure work, bidders are strongly encouraged to attend the pre-bid meeting.*

Questions about bidding procedures should be directed to the Division of Purchasing. Contact person is Paul Mash, Purchasing Agent.
Bids should be delivered to:

Division of Purchasing
3150 State Office Building
Salt Lake City, Utah 84114
(801) 538-3026 FAX: (801) 538-3882

Technical questions about the project should be directed to the project manager at the Division of Oil, Gas and Mining. Contact person is:

Louis A. Amodt, Project Manager
Division of Oil, Gas and Mining
1594 West North Temple, Suite 1210
Box 145801
Salt Lake City, Utah 84114-5801
(801) 538-5360 Fax: (801) 359-3940
E-mail: louisamodt@utah.gov

The following is a check list of items that **must** be provided with the bid documents:

? Division of Purchasing bid documents
? Proposal
? Agency Contract Bond Statement
? Bid Security (Bid Bond or Cashier's Check)
? Minority and Woman Business Enterprise Representation
? Bid Schedule
? Photocopy of current Utah Contractor's License

Required Submittals:

? Section 0230, Part 1, 1.02
? Section 0240, Part 1, 1.02, A
? Section 0270, Part 1, 1.02, A-B
? Section 0280, Part 1, 1.02, A-D
? Section 0290, Part 1, 1.02, A-B

The following items are required within 24 hours after bid opening from the apparent two low bidders only. They may be submitted with the bid at the bidder's option or convenience.

? Bidder's Proposed Subcontractors, Suppliers & Vendors List
? AVS Eligibility Check information: AML Contractor Ownership & Control Information Package

Bids must be delivered to the Division of Purchasing only. *Do NOT deliver bids to DOGM*.

Instructions To Bidders

1. Request for Bids

The Utah Division of Purchasing is accepting bids for the White Oak Mine Project. The WORK consists of reclamation of a coal mine site including earthwork, demolition, stream restoration, and revegetation in Carbon County, Utah. Details of the WORK are contained in these Specifications. **Sealed bids are due on Tuesday, September 14, 2004, no later than 2:00 P.M., at which time they will be opened and read aloud at the Division of Purchasing's office.**

2. Qualifications of Bidders

All CONTRACTORS must be currently licensed in Utah for the type of work to be done. Bidders shall submit a photocopy of their current Utah license covering the type of work to be done with their bid.

All CONTRACTORS who have previously performed WORK on a Utah Abandoned Mine Reclamation Program (UAMRP) project have been evaluated based on the Contractor Performance Rating Form (Appendix C). A rating of ten points or more is required to bid on this project.

3. Drawings and Specifications

Drawings and Specifications may be obtained from the Division of Oil, Gas and Mining for the amount stated in the Project Summary and Checklist. Checks should be made payable to the Utah Division of Oil, Gas and Mining. The payment is nonrefundable.

4. Pre-bid Meeting

An optional pre-bid site meeting will be held for all interested bidders on Tuesday, September 7, 2004. Meet at the turnoff to the mine, south of the town of Scofield on SR 96 2.8 miles, then west on SR 264 (Eccles Canyon) 1.3 miles at **10:00 A.M.** The meeting is expected to last most of the day and will involve driving and hiking over rugged terrain. High-clearance four-wheel-drive vehicles are recommended.

This meeting is optional. Attendance is not required to bid, but attendance should result in a more responsible bid. Abandoned mine closure work is different from standard residential or commercial construction. It requires specialized work in unusual conditions and unique circumstances. *Because of the special nature of abandoned mine closure work, bidders are strongly encouraged to attend the pre-bid meeting.* If attendance at the meeting is not possible, bidders should make every effort to examine the project on their own time. Abandoned mines are hazardous. Do not enter the mines.

5. Proposals

Before submitting a proposal, each bidder shall carefully examine the drawings, specifications and other contract documents and shall visit the site of the WORK; shall fully inform himself or herself as to all existing conditions and limitations; and shall include in the proposal the cost of all items included in the CONTRACT. CONTRACTOR shall fill out *all blanks* and include *all forms and submittals*, or be subject to having the bid disqualified. (See the checklist of bid items on page i).

The pages required for bidding are included in these specifications. For convenience, additional unbound copies of these pages will be distributed at the pre-bid site meeting. The bidder must submit the Proposal, Agency Contract Bond Statement, Bid Bond, Minority and Woman Business Enterprise Representation, Bid Schedule, photocopy of Utah contractor's license, and required submittals in the sealed bid, along with the required Division of Purchasing bid documents.

Deliver proposals to the Division of Purchasing only. Do not deliver proposals to DOGM.

6. Contract and Bond

The contract agreement will be on a form similar to that which is bound in the specifications. The completion date of construction will be as indicated in the proposal. The successful bidder, within 14 days after the bid opening, will be required to furnish a performance bond and a payment bond in an amount equal to one hundred percent (100%) of the contract price, said bonds shall be secured from a company satisfactory to OWNER. **The surety company must be a U.S. Department of Treasury (Circular 570) listed company.**

7. Listing of Subcontractors

The experience and responsibility of Subcontractors may have bearing on the selection of a CONTRACTOR by the OWNER.

The apparent two low bidders shall deliver to OWNER within 24 hours (excluding Saturday, Sunday, and State holidays) for OWNER's approval, a list of the names of Subcontractors to be furnished for each of the principal parts of the work and the corresponding dollar amounts. Each principal part shall mean a subcontract dollar value in excess of $5,000. A form for this submission is included in these Specifications. Such list shall be binding upon the CONTRACTOR; however, OWNER has a right to reject any or all Subcontractors listed or unlisted which OWNER feels are unqualified to do the work.

OWNER may withhold award of CONTRACT to any particular bidder if one or more of his or her proposed Subcontractors are considered by the OWNER to be unqualified.

8. Interpretation of Plans and Specifications

If any person contemplating submitting a bid for the proposed CONTRACT is in doubt as to the true meaning of any part of the drawings, specifications or other proposed CONTRACT documents, he or she may submit to the Division of Oil, Gas & Mining a written request for an interpretation thereof. The person submitting the request will be responsible for its prompt delivery.

Any interpretation of the proposed documents will be made only by addendum duly issued. A copy of such addendum will be mailed or delivered to each person receiving a set of documents, and posted on the UAMRP website at www.ogm.utah.gov/amr/contract.htm. The OWNER will not be responsible for any other explanations or interpretations of the proposed documents.

9. Addenda or Bulletins

Any addenda or bulletins issued during the time of bidding shall become part of the documents issued to the bidders for the preparation of the bid, shall be covered in the bid, and shall be made a part of the CONTRACT.

10. Bid Schedule

Bidding CONTRACTORS shall examine the specifications and the Bid Schedule and *fill in all blanks* of the CONTRACTOR's Proposal and Bid Schedule and submit all required information contained in the Specifications Schedule, including required submittals, or have the bid subject to disqualification.

11. Award of CONTRACT

The CONTRACT will be awarded as soon as possible to the lowest responsible bidder, provided the bid is reasonable and is in the interests of the OWNER to accept. Responsible bidders will be considered to be those bidders who have fully evaluated the work to be performed, as detailed in their bids. For bidders who have previously performed WORK on a UAMRP project, evaluation of the responsibility of the bidder will also include consideration of past performance on AMR contracts for OWNER. Both the Lump Sum Amount and the Variation in Quantities Unit Price for all work items will be considered in awarding the CONTRACT. Lump Sum Amounts do not have to equal the product of the estimated quantity times the Variation in Quantity Unit Price, but OWNER may reject a bid if unit prices are substantially out of line with the Lump Sum Amount. The OWNER reserves the right to waive any technicalities or formalities in any

bid or in the bidding.

12. Qualifications

The CONTRACTOR's and Subcontractor's past performance, organization, equipment, and ability to perform and complete their contracts in the manner and within the time limit specified will be elements along with the cash amount of the bid, which will be considered by the OWNER in the letting of the CONTRACT. A rating of ten points or more on the Contractor Performance Rating Form (Appendix C) is required for any CONTRACTOR who has previously performed WORK on a Utah AMR project. The CONTRACTOR shall comply with and require all of his or her Subcontractors to comply with the license laws as required by the State of Utah.

13. Cost Breakdown

The CONTRACTOR shall, before starting WORK, submit to OWNER a cost breakdown showing the cost of various segments of the WORK according to a specification heading, the total amount equaling the CONTRACT price. This breakdown shall be used as the basis for the payment of estimates as stated in the contract documents.

14. Right to Reject Proposals

The OWNER reserves the right to reject any or all proposals.

15. Time is Essence and Award of CONTRACT

Time is of the essence in award of the CONTRACT.

16. Withdrawal of Bids

Bids may be withdrawn upon written or electronic request received from bidders prior to the time fixed for opening. Electronic request via FAX or E-mail must be received by OWNER in written form before bid opening. Negligence on the part of the bidder in preparing the bid confers no right for the withdrawal of the bid after it has been opened.

17. Bid Security

Bid Security in the amount of five percent (5%) of the bid, made payable to the Division of Oil, Gas & Mining, shall accompany bid. If a certified or cashier's check is used in lieu of bid bond, a current certificate from an approved surety company guaranteeing execution of a 100% Performance Bond and 100% Payment Bond must be on file with the OWNER.

18. Applicant Violator System (AVS) Eligibility Check

Federal regulations (30 CFR 874.16) effective July 1, 1994, require all successful bidders on contracts funded through Title IV of the Surface Mining Control and Reclamation Act (SMCRA) of 1977 to be eligible under 30 CFR 773.15(b)(1) to receive a permit to conduct surface coal mining operations. In general, this means that the Utah Abandoned Mine Reclamation Program may not hire a contractor who is or whose company is associated with a coal mine operator with outstanding unabated violations under SMCRA. The regulations further require that contractor eligibility be confirmed by the Applicant/Violator System (AVS) at the U.S. Office of Surface Mining (OSM). Compliance checks are also required for all subcontractors receiving 10% or more of the total contract amount.

19. Buy American Act

Compliance with the Buy American Act is required for this project. The Buy American Act requires the use of domestically produced materials.

20. Electronic Specs Available

OWNER has electronic versions of the Contract Specifications available on DOGM's website at http://www.ogm.utah.gov/amr/contract.htm. Files include the text of the Contract Specifications (as a Microsoft Word 2000 file and an Adobe Acrobat *.pdf file), the maps (in *.pdf format, readable with Adobe Acrobat Reader software available free online), and a spreadsheet with the Appendix B mine descriptions and closure specifications (as an Excel *.xls file). The spreadsheet file may be especially useful in preparing a bid because it can automate the arithmetic. Files can be downloaded from the website. Any questions regarding digital data should be directed to Jan Morse, 801-538-5350, e-mail: janmorse@utah.gov

Proposal

NAME OF BIDDER_____DATE_____

TO THE DIVISION OF PURCHASING
3150 STATE OFFICE BUILDING
SALT LAKE CITY, UTAH 84114

Re: RX No: 560 52000000003

Gentlemen:

The undersigned, in compliance with your invitation for bids for the

_____WHITE OAK MINE RECLAMATION CONSTRUCTION_____

having examined the Drawings and Specifications, related documents, and the site of the proposed work and being familiar with all of the conditions surrounding the construction of the proposed project, including the availability of labor, hereby propose to furnish all labor, materials, and supplies as required for the WORK in accordance with the CONTRACT documents as specified and within the time set forth and at the price stated below. This price is to cover all expenses incurred in performing the WORK required under the CONTRACT Documents of which this Proposal is a part. Negotiation of BID PRICE shall be completed with the OWNER prior to final execution of the CONTRACT.

I/We acknowledge receipt of the following addenda:

For all WORK shown on the Drawings and described in the Specifications, I/we agree to perform for the sum of:

_____DOLLARS ($_____)
(In case of discrepancy, written amount shall govern)

For your consideration, we further propose the following ALTERNATIVES for the following total amounts to be added/deducted to/from the above bid amount:

_____ Add $_____Deduct $_____

I/We guarantee to complete the WORK within _120_ calendar days after receipt of Notice to Proceed, should I/we be the successful bidder.

For your consideration I/we propose an alternative amount of time to complete the WORK after Notice to Proceed, should I/we be the successful bidder. Such an extension allows the following total amount to be deducted from the bid amount:

Alternative: _____ Total Calendar Days Deduct $_____

This bid shall be good for 45 days after bid opening.

Enclosed is_____, as required, in the sum of $ _____
(Bond or Check)

If applicable, the CONTRACTOR shall certify that all reclamation fees or civil penalty assessments required by the provision of the Surface Mining Control and Reclamation Act of 1977, P.L. 95-87, 30 U.S.C. Sec 1201 et seq., have been paid. Provided further, this certification requirement shall also apply to all Subcontractors utilized by the successful bidders.

Upon receipt of notice of acceptance of this bid, the undersigned agrees to execute the CONTRACT within five (5) days and deliver OWNER's protective bond (performance and bid) in the prescribed form in the amount of 100% of the general construction contract price for faithful performance of the CONTRACT. The certified check, cashier's check or Bid Bond attached, in the amount not less than five percent (5%) of the above BID PRICE, shall become the property of the Division of Oil, Gas & Mining in the event that the CONTRACT is not negotiated and/or the OWNER's Protective Bond delivered within the time set forth, as liquidated damages for the delay and additional expense caused thereby.

SUBSTITUTIONS AND ALTERNATIVES:

The following substitutions and/or alternatives of materials and/or equipment are proposed for your consideration:

Item	Manufacturer and Description	Addition	Deduction
_____	_____	$_____	$_____
_____	_____	$_____	$_____
_____	_____	$_____	$_____

CONTRACTOR shall furnish and attach to this proposal all submittals as required in the specifications:

? Section 0230, Part 1, 1.02
? Section 0240, Part 1, 1.02, A
? Section 0270, Part 1, 1.02, A-B
? Section 0280, Part 1, 1.02, A-D
? Section 0290, Part 1, 1.02, A-B

The undersigned CONTRACTOR's License Number for Utah is _____

Type of Organization:

_____
(Corporation, Co-Partnership, Individual, etc.)

_____
(Tax ID No.)

SEAL
(If a Corporation)

Respectfully submitted,

_____
Name of Bidder

_____
Address

_____
Authorized Signature

STATE OF UTAH

Division of Purchasing

Agency Contract Bond Statement

BIDDING REQUIREMENTS

A 5% bid bond or cashier's check is required by all vendors bidding on this project. The bid bond must be attached to bid **or it will be disqualified.** Checks submitted will be returned certified mail after an official award has been made.

AWARD REQUIREMENTS

A 100% performance/payment bond will be required from the award vendor within 14 days after notification of award. Bonds must be in the form of a cashiers check (no personal or business checks) or a surety bond from a licensed surety company doing business in the State of Utah.

Performance/payment bonds (or checks) will be **held as security for a period of 12 months after completion of project**, per state law. Checks submitted will be returned certified mail only after this specified time. Bidder's name must be the same on both the bid forms and all bonds submitted.

Please indicate which method of bonding will be used if awarded this job:

____ 100% CASHIERS CHECK

____ 100% PERFORMANCE/PAYMENT BOND

Bond/Ins Company _____

Agent name _____

Fax # _____ Phone # _____

Upon awarding, the requesting agency will fax a verification to the bonding company listed above to start the bonding process. It is then the responsibility of the vendor to follow through with their bonding agent to assure the bond is processed. After the bonding company sends the bond to vendor for signatures, it is the responsibility of the vendor to mail or hand carry the original bond (no copies or faxes accepted) to the requesting agency, to the attention of the contract person listed on the bid. **No work can commence until the requesting agency has receipt of this performance/payment bond.** After this time the contract will be officially released to the award vendor.

Bid Bond

_____
Date Bond Executed

_____
Principal

_____
Surety

_____
Sum of Bond

KNOW ALL MEN OF THESE PRESENTS, that we, the PRINCIPAL AND SURETY above named, are held and firmly bound unto the STATE OF UTAH, ACTING BY AND THROUGH THE DIVISION OF OIL, GAS AND MINING OF UTAH, IN THE SUM OF THE AMOUNT STATED ABOVE, FOR THE PAYMENT OF WHICH SUM WELL AND TRULY TO BE MADE, we bind ourselves, our heirs, executors, administrators, and successors, jointly and severally, firmly by these presents. THE CONDITION OF THIS OBLIGATION IS SUCH that whereas the principal has submitted the accompanying bid, dated as shown above, for

$_____

NOW THEREFORE, THE CONDITION OF THE ABOVE OBLIGATION IS SUCH, that if the said principal shall execute a CONTRACT and give bond to be approved by the Obligee for the faithful performance thereof within ten (10) days after being notified in writing of such CONTRACT to the principal, this obligation shall then be null and void; otherwise it shall remain in full force and effect.

IN WITNESS WHEREOF, the above bounden parties have executed this instrument under their several seals on the date indicated above, the name and corporate seal of each corporate party being hereto affixed and these presents duly signed by its undersigned representative, pursuant to authority of its governing body.

_____
Individual or Partnership Principal

_____
Business Address

_____

_____
Corporate Principal

_____
Business Address

_____

By:

_____
Title

Affix Corporate Seal

_____
Corporate Surety:

_____
Business Address

_____

NOTE: If certified or cashier's check is used in lieu of Bid Bond, a certificate from an approved surety company guaranteeing execution of a full performance bond must accompany bid.

By:

_____
Attorney-in-Fact

Affix Corporate Seal

STATE OF UTAH)
COUNTY OF SALT LAKE)

_____, being first duly sworn on oath, deposes and says that he/she is the Attorney-in-Fact of the above-named Surety Company, and that he/she is duly authorized to execute the same and has complied in all respects with the laws of Utah in reference to becoming sole surety upon bonds, undertakings and obligations.

Subscribed and sworn to before me this _____ day of _____, 20_____.

My commission expires _____.

_____
Attorney-in-Fact

Bidder's Proposed Subcontractors, Suppliers & Vendors List

WHITE OAK MINE PROJECT
RECLAMATION CONSTRUCTION
AMR/007/934
Utah Division of Oil, Gas & Mining

We submit the following list of first-tier subcontractors, suppliers and vendors for OWNER approval. We recognize this list as binding on us, and acknowledge OWNER'S right to reject any or all subcontractors, suppliers or vendors listed or unlisted which the OWNER feels are unqualified to do the work.

SUBCONTRACTOR	CONTRACT AMOUNT	STATE CONTRACTOR'S LICENSE NO.	LICENSE LIMIT
Excavation:			
Concrete Fabrication:			
Masonry:			
Demolition:			
Steel Fabrication:			
Revegetation:			
Trucking/Transport:			
Polyurethane Foam:			
Other:			
Other:			
Other:			

BIDDER'S PROPOSED SUBCONTRACTORS, SUPPLIERS & VENDORS LIST
Page 2

SUPPLIER/VENDOR	AMOUNT	PRODUCT
Ready -Mix:		
Cement/Block:		
Steel:		
Polyurethane Foam:		
Other:		
Other:		
Other:		

We certify that:

1. This list includes all subcontractors, suppliers and vendors whose bids exceed $5,000 (for prime contractor bids less than $250,000) or $25,000 (for prime contractor bids of $250,000 or more).
2. Where we have listed "Self" it is our intent to perform said work and that we generally and regularly perform that type of work, and are appropriately licensed.
3. Any approved change in sub-bidders, suppliers or vendors which results in a lower contract price for sub-bid work shall accordingly reduce the total sum of the prime contract.

Signed by: _____

Firm: _____

Date: _____

Note: *Failure to submit this form properly completed and signed within 24 hours (not including Saturday, Sunday, or State holidays) of the bid opening may be grounds for OWNER'S refusal to enter into a written CONTRACT with BIDDER. Action will be taken against BIDDER'S bid bond or cashier's check as deemed appropriate by OWNER. Timely notice of unacceptable subcontractors, suppliers or vendors will be given to the BIDDER. Reporting of subcontractors may be required for conformance with 63A-5-208 UCA.*

Minority And Woman Business Enterprise Representation

The offeror represents that it ? is ? is not a minority business enterprise.

A minority business enterprise is defined as a concern that:

1) is at least 51 percent owned by one or more individuals who are socially and economically disadvantaged, or a publicly owned business having at least 51 percent of its stock owned by one or more individuals who are socially and economically disadvantaged individuals; and
2) has its management and daily business controlled by one or more such individuals.

Qualified groups. The offeror shall presume that socially and economically disadvantaged individuals include Black Americans, Hispanic American, Native Americans, Asian-Pacific American, Asian-Indian Americans, and other individuals found to be qualified by the Small Business Administration under 13 CFR 124.I.

The offeror represents that it ? is ? is not a woman business enterprise.

A woman business enterprise is defined as a concern that:

1) is at least 51 percent owned by one or more women, or a publicly owned business having at least 51 percent of its stock owned by one or more women; and
2) has its management and daily business controlled by one or more of the women owners.

Business firms which are 51 percent owned by minorities or women, but are in fact managed and operated by non-minority individuals do not qualify as minority or woman business enterprises.

The offeror represents that the following proposed subcontractor(s) is (are) a minority or woman business enterprise:

_____

_____

_____
Signature of Offeror

_____
Title

_____
Date

This information is requested for Federal reporting purposes only. Minority/woman status has no bearing on the selection of a contractor.

Applicant/Violator System Eligibility Check

Federal regulations (30 CFR 874.16) effective July 1, 1994, require all successful bidders on contracts funded through Title IV of the Surface Mining Control and Reclamation Act (SMCRA) of 1977 to be eligible under 30 CFR 773.15(b)(1) to receive a permit to conduct surface coal mining operations. In general, this means that the Utah Abandoned Mine Reclamation Program may not hire a contractor who is or whose company is associated with a coal mine operator with outstanding unabated violations under SMCRA. The regulations further require that contractor eligibility be confirmed by the Applicant/Violator System (AVS) at the U.S. Office of Surface Mining (OSM). Compliance checks are also required for all subcontractors receiving 10% or more of the total contract amount.

To comply with these rules, prospective bidders must provide the Division of Oil, Gas and Mining with information on the ownership and control of the firm for AVS review. A bidder must receive a recommendation of "Issue" or "Conditional Issue" from the OSM AVS office to be awarded the contract.

The two apparent low bidders shall submit to DOGM within 24 hours (excluding weekends and holidays) of the bid opening either a notarized copy of the "AML Contractor Ownership and Control Information Package" or else a copy of the "AML Contractor Ownership and Control Data Certification" updating and certifying previously submitted information. DOGM will provide forms for these submissions or you may download from the Internet at http://www.avs.osmre.gov. DOGM will submit the ownership and control information to OSM for AVS review. OSM's review will be completed within 72 hours if the ownership and control data entry is complete.

Bidders may choose to submit the required information prior to submitting the bid proposal in order to facilitate data entry by OSM and expedite the AVS review and contract award process. Forms may be obtained from DOGM.

The following information is required for the "AML Contractor Ownership and Control Information Package":

- Contractor's identity (name, address, telephone, Social Security number, Employee ID number).
- Contractor's legal structure (sole proprietorship, partnership, corporation).
- Identities (name, address, telephone, SSN, EIN, % ownership) of every officer, general partner, shareholder (≥20% voting stock), director, or other controlling entity.
- Identities of parties with the authority to commit the assets of the firm.
- Identities of other relationships that give direct or indirect authority over the execution of the work.
- List (name, address, permit number, MSHA number) of all permits issued in the last five years to or pending permit applications for coal mining operations by any parties identified above.
- All of the above information for any subcontractor with ≥10% of the contract amount.

White Oak Mine Project
Summary Bid Schedule

	Lump Sum Amount
SITE ACCESS & IMPROVEMENT	$_____
DEMOLITION & CLEANUP	$_____
SITE GRADING & EARTHWORK	$_____
STREAM RESTORATION	$_____
REVEGETATION	$_____
MOBILIZATION/DEMOBILIZATION	$_____
BONDS & INSURANCE	$_____
TOTAL CONTRACT BID PRICE	$_____

TOTAL CONTRACT BID PRICE WRITTEN:

_____

_____

DATE: _____ BY: _____

FIRM: _____

By the above signature I/we acknowledge that I/we have examined the site conditions and have made the measurements and evaluations necessary to plan and bid the WORK.

Note: The "Variation in Quantity Unit Price" on the Mine Closure Bid Schedule will be used for adjustments to the CONTRACT amount where the actual WORK quantity varies by more than 15% from the estimated quantity listed in the bid schedule (see Supplementary Condition No. 6: Variation in Estimated Quantity). The "Variation in Quantity Unit Price" will also be used as the basis for determining costs for closures not currently specified in the WORK that may be added in the future by change order. Award of CONTRACT will be based on consideration of both the base "Bid Price" and the "Variation in Quantity Unit Price" for additional/reduced WORK.

White Oak Mine Project
Bid Schedule

	Reclamation Action Item Site No. and Name	Specification Section	Tag Number	Estimated Quantity	Lump Sum Amount($)	Variation in Quantity Unit Price ($/Unit)
1.	**Site Access & Improvements**	**0230**				
	Mine Site			Access 1 ea.	$_____	$____n/a____
2.	**Demolition & Cleanup**	**0240**				
	Guard Rail			1 ea.	$_____	$____n/a____
3.	**Site Grading & Earthwork**	**0270**				
	Area 1		Fill	3,000 cyd	$_____	$_____/cyd
	Area 2		Cut	500 cyd	$_____	$_____/cyd
	Area 3		Cut	747 cyd	$_____	$_____/cyd
			Fill	2,877 cyd	$_____	$_____/cyd
	Area 4		Cut	2,517 cyd	$_____	$_____/cyd
			Fill	2,369 cyd	$_____	$_____/cyd
	Area 5		Cut	325 cyd	$_____	$_____/cyd
			Fill	325 cyd	$_____	$_____/cyd
	Area 6		Cut	12,132 cyd	$_____	$_____/cyd
			Fill	744 cyd	$_____	$_____/cyd
	Area 7		Cut	333 cyd	$_____	$_____/cyd
			Fill	2,859 cyd	$_____	$_____/cyd
	Area 8		Cut	57,053 cyd	$_____	$_____/cyd
			Fill	142,901 cyd	$_____	$_____/cyd

Area 9	Cut	13,456 cyd	$_____	$_____/cyd
	Fill	2,162 cyd	$_____	$_____/cyd
Area 10	Cut	136,936 cyd	$_____	$_____/cyd
	Fill	137,000 cyd	$_____	$_____/cyd
Area 11	Cut	11,134 cyd	$_____	$_____/cyd
	Fill	12,376 cyd	$_____	$_____/cyd
Area 12	Cut	125,213 cyd	$_____	$_____/cyd
	Fill	175 cyd	$_____	$_____/cyd
Area 13	Cut	999 cyd	$_____	$_____/cyd
	Fill	5 cyd	$_____	$_____/cyd
Area 14	Cut	13,912 cyd	$_____	$_____/cyd
	Fill	56,141 cyd	$_____	$_____/cyd
Area 15	Roughening	8.0 ac	$_____	$_____/acre
Area 16	Cut	535 cyd	$_____	$_____/cyd
	Fill	535 cyd	$_____	$_____/cyd

4. Stream Restoration 0280

Sub-drain Area 5	310 ft	$_____	$_____/ft
	325 cyd	$_____	$_____/cyd
Sub-drain Area 7	220 ft	$_____	$_____/ft
	33 cyd	$_____	$_____/cyd
Rip-rap Area 14 - Channel Design A	2,100 ft	$_____	$_____/ft
	3,970 cyd	$_____	$_____/cyd
Rip-rap Area 18 - Channel Design B	240 ft	$_____	$_____/ft
	230 cyd	$_____	$_____/cyd
Perforated CMP Area 17	340 ft	$_____	$_____/ft

5. Revegetation 0290

Seed mixture Area	40 acres	$_____	$_____/acre
Transplants SE Slopes Area	5 acres	$_____	$_____/acre
Transplants NW Slopes Area	4 acres	$_____	$_____/acre

Total Bid for WHITE OAK MINE **$_____**

Note: Award of CONTRACT will be based on consideration of both the base "Bid Price" and the "Variation in Quantity Unit Price" for additional/reduced WORK.

Contract # _____

1. CONTRACTING PARTIES: This contract is between the following agency of the State of Utah:

Department of Natural Resources (Agency Name) 560 (Agency Code) Division of Oil, Gas and Mining (Division), referred to as OWNER,

and the following CONTRACTOR:

_____
Name

_____
Address

_____
City State Zip

_____
Contact Person

_____
Phone E-mail Address

LEGAL STATUS OF CONTRACTOR
- ? Sole Proprietor
- ? Non-Profit Corporation
- ? For-Profit Corporation
- ? Partnership
- ? Government Agency

Federal Tax ID#_____
Vendor #_____
Commodity Code #____96273_____

FI-NET Accounting Codes: White Oak Mine Project

Fund	Agency	Org	Approp. Unit	Activity (Mine)	Grant Category	Project or Job
100	560	2881	REG			

2. GENERAL PURPOSE OF CONTRACT: The general purpose of this contract is for reclamation construction of an abandoned mine site in Carbon County, Utah, referred to as the White Oak Mine Project.

3. PROCUREMENT: This contract is entered into as a result of the procurement process on Bid # _ ***PM _, Requisition #_RX***, FY2004, or the attached pre-approved sole source.

4. CONTRACT PERIOD: Effective date _***MONTH DAY, YEAR_. Termination date _***MONTH DAY, YEAR unless terminated early or extended in accordance with the terms and conditions of this contract. Renewal options (if any)***.

5. CONTRACT COSTS: CONTRACTOR will be paid a maximum of $_**********_ for costs authorized by this contract.

6. ATTACHMENT A: Division of Purchasing's Standard Terms and Conditions. Any conflicts between Attachment A and other Attachments will be resolved in favor of Attachment A.

   ATTACHMENT B: SCOPE OF WORK, hereinafter the WORK, to be performed is that contained in the Drawings and Technical Specifications prepared by: the Division of Oil, Gas & Mining and entitled *TECHNICAL SPECIFICATIONS: White Oak Mine Reclamation Construction*; the General Specifications prepared by the Division of Oil, Gas and Mining entitled *GENERAL CONDITIONS FOR ABANDONED MINE RECLAMATION PROJECTS*, dated June, 1988; and the Supplementary Conditions listed in the Technical Specifications cited above.

   ATTACHMENT C: Division of Oil, Gas and Mining Construction Terms and Conditions.

   ATTACHMENT D: Cost Schedule

7. DOCUMENTS INCORPORATED INTO THIS CONTRACT BY REFERENCE BUT NOT ATTACHED:

   a. All other governmental laws, regulations, or actions applicable to the goods and/or services authorized by this contract.

   b. Utah State Procurement Code, Procurement Rules, and CONTRACTOR'S response to Bid # PM*** , dated ***MONTH DAY, YEAR.

IN WITNESS WHEREOF, the parties sign and cause this contract to be executed.

FOR THE CONTRACTOR:

ATTEST:

_____
Secretary of Corporation or Witness

CONTRACTOR:

BY: _____

NAME: _____

TITLE: _____

TAXPAYER ID #: _____

FOR THE STATE OF UTAH:

APPROVED FOR AVAILABILITY OF FUNDS:
DEPARTMENT OF NATURAL RESOURCES
DIVISION OF OIL, GAS & MINING

_____
Mark Mesch, AMR Administrator

_____
Lowell P. Braxton, Director

_____
Carl Roberts, Budget/Accounting

APPROVED FOR EXPENDITURE:
DIVISION OF PURCHASING

DIVISION OF FINANCE

_____
Douglas G. Richins, Director of Purchasing

_____
(for) Kim S. Thorne, Director of Finance

Louis A. Amodt	(801) 538-5360	(801) 359-3940	louisamodt@utah.gov
Agency Contact	Phone Number	Fax Number	E-mail Address

APPROVED AS TO FORM BY
ATTORNEY GENERAL'S OFFICE
DOGM Construction Contract (revised 06/17/04)
Reference: Division of Finance Form FI 84 (revised 08/26/03)

ATTACHMENT A
STANDARD TERMS AND CONDITIONS

1. AUTHORITY: Provisions of this contract are pursuant to the authority set forth in 63-56, Utah Code Annotated, 1953, as amended, Utah State Procurement Rules (Utah Administrative Code Section R33), and related statutes which permit the State to purchase certain specified services, and other approved purchases for the State.

2. CONTRACT JURISDICTION, CHOICE OF LAW, AND VENUE: The provisions of this contract shall be governed by the laws of the State of Utah. The parties will submit to the jurisdiction of the courts of the State of Utah for any dispute arising out of this Contract or the breach thereof. Venue shall be in Salt Lake City, in the Third Judicial District Court for Salt Lake County.

3. LAWS AND REGULATIONS: Any and all supplies, services and equipment furnished will comply fully with all applicable Federal and State laws and regulations.

4. RECORDS ADMINISTRATION: The CONTRACTOR shall maintain, or supervise the maintenance of all records necessary to properly account for the payments made to the CONTRACTOR for costs authorized by this contract. These records shall be retained by the CONTRACTOR for at least four years after the contract terminates, or until all audits initiated within the four years, have been completed, whichever is later. The CONTRACTOR agrees to allow State and Federal auditors, and State Agency Staff, access to all the records to this contract, for audit and inspection, and monitoring of services. Such access will be during normal business hours, or by appointment.

5. CONFLICT OF INTEREST: CONTRACTOR represents that none of its officers or employees are officers or employees of the State of Utah, unless disclosure has been made in accordance with 67-16-8, Utah Code Annotated, 1953, as amended.

6. CONTRACTOR, AN INDEPENDENT CONTRACTOR: The CONTRACTOR shall be an independent contractor, and as such, shall have no authorization, express or implied, to bind the State to any agreements, settlements, liability, or understanding whatsoever, and agrees not to perform any acts as agent for the State, except as herein expressly set forth. Compensation stated herein shall be the total amount payable to the CONTRACTOR by the State. The CONTRACTOR shall be responsible for the payment of all income tax and social security amounts due as a result of payments received from the State for these contract services. Persons employed by the State and acting under the direction of the State shall not be deemed to be employees or agents of the CONTRACTOR.

7. INDEMNITY CLAUSE: The CONTRACTOR agrees to indemnify, save harmless, and release the State of Utah, and all its officers, agents, volunteers, and employees from and against any and all loss, damages, injury, liability, suits, and proceedings arising out of the performance of this contract which are caused in whole or in part by the negligence of the CONTRACTOR's officers, agents, volunteers, or employees, but not for claims arising from the State's sole negligence.

8. EQUAL OPPORTUNITY CLAUSE: The CONTRACTOR agrees to abide by the provisions of Title VI and VII of the Civil Rights Act of 1964 (42USC 2000e) which prohibits discrimination against any employee or applicant for employment or any applicant or recipient of services, on the basis of race, religion, color, or national origin; and further agrees to abide by Executive Order No. 11246, as amended, which prohibits discrimination on the basis of sex; 45 CFR 90 which prohibits discrimination on the basis of age; and Section 504 of the Rehabilitation Act of 1973, or the Americans with Disabilities Act of 1990 which prohibits discrimination on the basis of disabilities. Also, the CONTRACTOR agrees to abide by Utah's Executive Order, dated March 17, 1993, which prohibits sexual harassment in the work place.

9. SEPARABILITY CLAUSE: A declaration by any court, or any other binding legal source, that any provision of this contract is illegal and void shall not affect the legality and enforceability of any other provision of this contract, unless the provisions are mutually dependent.

10. RENEGOTIATION OR MODIFICATIONS: This contract may be amended, modified, or supplemented only by written amendment to the contract, executed by the same persons or by persons holding the same position as persons who signed the original agreement on behalf of the parties hereto, and attached to the original signed copy of the contract.

11. DEBARMENT: The CONTRACTOR certifies that neither it nor its principals are presently debarred, suspended, proposed for debarment, declared ineligible, or voluntarily excluded from participation in this transaction (contract), by any governmental department or agency. If the CONTRACTOR cannot certify this statement, attach a written explanation for review by the State. The CONTRACTOR must notify the State Director of Purchasing within 30 days if debarred by any governmental entity during the Contract period.

12. TERMINATION: Unless otherwise stated in the Special Terms and Conditions, this contract may be terminated, with cause by either party, in advance of the specified termination date, upon written notice being given by the other party. The party in violation will be given ten (10) working days after notification to correct and cease the violations, after which the contract may be terminated for cause. This contract may be terminated without cause, in advance of the specified expiration date, by either party, upon 90 days prior written notice being given the other party. On termination of this contract, all accounts and payments will be processed according to the financial arrangements set forth herein for approved services rendered to date of termination.

13. NONAPPROPRIATION OF FUNDS: The CONTRACTOR acknowledges that the State cannot contract for the payment of funds not yet appropriated by the Utah State Legislature. If funding to the State is reduced due to an order by the Legislature or the Governor, or is required by State law, or if federal funding (when applicable) is not provided, the State may terminate this contract or proportionately reduce the services and purchase obligations and the amount due from the State upon 30 days written notice. In the case that funds are not appropriated or are reduced, the State will reimburse CONTRACTOR for products delivered or services performed through the date of cancellation or reduction, and the State will not be liable for any future commitments, penalties, or liquidated damages.

14. SALES TAX EXEMPTION: The State of Utah's sales and use tax exemption number is E33399. The tangible personal property or services being purchased are being paid from State funds and used in the exercise of that entity's essential functions. If the items being purchased are construction materials, they will be converted into real property by employees of this government entity, unless otherwise stated in the contract.

15. WARRANTY: The CONTRACTOR agrees to warrant and assume responsibility for all products (including hardware, firmware, and/or software products) that it licenses, contracts, or sells to the State of Utah under this contract for a period of one year, unless otherwise specified and mutually agreed upon elsewhere in this contract. The CONTRACTOR (seller) acknowledges that all warranties granted to the buyer by the Uniform Commercial Code of the State of Utah apply to this contract. Product liability disclaimers and/or warranty disclaimers from the seller are not applicable to this contract unless otherwise specified and mutually agreed upon elsewhere in this contract. In general, the CONTRACTOR warrants that: (1) the product will do what the salesperson said it would do, (2) the product will live up to all specific claims that the manufacturer makes in their advertisements, (3) the product will be suitable for the ordinary purposes for which such product is used, (4) the product will be suitable for any special purposes that the State has relied on the CONTRACTOR's skill or judgment to consider when it advised the State about the product, (5) the product has been properly designed and manufactured, and (6) the product is free of significant defects or unusual problems about which the State has not been warned. Remedies available to the State include the following: The CONTRACTOR will repair or replace (at no charge to the State) the product whose nonconformance is discovered and made known to the CONTRACTOR in writing. If the repaired and/or replaced product proves to be inadequate, or fails of its essential purpose, the CONTRACTOR will refund the full amount of any payments that have been made. Nothing in this warranty will be construed to limit any rights or remedies the State of Utah may otherwise have under this contract.

16. PUBLIC INFORMATION: CONTRACTOR agrees that the contract will be a public document, and may be available for distribution. And CONTRACTOR gives the State express permission to make copies of the contract and/or of the response to the solicitation in accordance with the State of Utah Government Records Access and Management Act. The permission to make copies as noted will take precedence over any statements of confidentiality, proprietary information, copyright information, or similar notation.

17. DELIVERY: Unless otherwise specified in this contract, all deliveries will be F.O.B. destination with all transportation and handling charges paid by the CONTRACTOR. Responsibility and liability for loss or damage will remain with CONTRACTOR until final inspection and acceptance when responsibility will pass to the State except as to latent defects, fraud and CONTRACTOR's warranty obligations.

18. ORDERING AND INVOICING: All orders will be shipped promptly in accordance with the delivery schedule. The CONTRACTOR will promptly submit invoices (within 30 days of shipment or delivery of services) to the State.

The State contract number and/or the agency purchase order number shall be listed on all invoices, freight tickets, and correspondence relating to the contract order. The prices paid by the State will be those prices listed in the contract. The State has the right to adjust or return any invoice reflecting incorrect pricing.

19. PAYMENT: Payments are normally made within 30 days following the date the order is delivered or the date a correct invoice is received, whichever is later. All payments to the CONTRACTOR will be remitted by mail unless paid by the State of Utah's Purchasing Card.

20. PATENTS, COPYRIGHTS, ETC.: The CONTRACTOR will release, indemnify and hold the State, its officers, agents and employees harmless from liability of any kind or nature, including the CONTRACTOR's use of any copyrighted or un-copyrighted composition, secret process, patented or un-patented invention, article or appliance furnished or used in the performance of this contract.

21. ASSIGNMENT/SUBCONTRACT: CONTRACTOR will not assign, sell, transfer, subcontract or sublet rights, or delegate responsibilities under this contract, in whole or in part, without the prior written approval of the State.

22. DEFAULT AND REMEDIES: Any of the following events will constitute cause for the State to declare CONTRACTOR in default of the contract: 1. Nonperformance of contractual requirements; 2. A material breach of any term or condition of this contract. The State will issue a written notice of default providing a ten (10) day period in which CONTRACTOR will have an opportunity to cure. Time allowed for cure will not diminish or eliminate CONTRACTOR's liability for damages. If the default remains, after CONTRACTOR has been provided the opportunity to cure, the State may do one or more of the following: 1. Exercise any remedy provided by law; 2. Terminate this contract and any related contracts or portions thereof; 3. Impose liquidated damages, if liquidated damages are listed in the contract; 4. Suspend CONTRACTOR from receiving future solicitations.

23. FORCE MAJEURE: Neither party to this contract will be held responsible for delay or default caused by fire, riot, acts of God and/or war which is beyond that party's reasonable control. The State may terminate this contract after determining such delay or default will reasonably prevent successful performance of the contract.

24. PROCUREMENT ETHICS: The CONTRACTOR understands that a person who is interested in any way in the sale of any supplies, services, construction, or insurance to the State of Utah is violating the law if the person gives or offers to give any compensation, gratuity, contribution, loan or reward, or any promise thereof to any person acting as a procurement officer on behalf of the State, or who in any official capacity participates in the procurement of such supplies, services, construction, or insurance, whether it is given for their own use or for the use or benefit of any other person or organization (63-56-73, Utah Code Annotated, 1953, as amended).

25. CONFLICT OF TERMS: CONTRACTOR Terms and Conditions that apply must be in writing and attached to the contract. No other Terms and Conditions will apply to this contract including terms listed or referenced on a CONTRACTOR's website, terms listed in a CONTRACTOR quotation/sales order, etc. In the event of any conflict in the contract terms and conditions, the order of precedence shall be: 1. State Standard Terms and Conditions; 2. State Special Terms and Conditions; 3. CONTRACTOR Terms and Conditions.

DOGM Standard Terms and Conditions (revised 06/11/04)
Reference: Division of Purchasing Standard Terms and Conditions (revised 11/21/03)

End Attachment A

ATTACHMENT B
SCOPE OF WORK

SCOPE OF WORK, hereinafter the WORK, to be performed is that contained in the Drawings and Technical Specifications prepared by: the Division of Oil, Gas & Mining and entitled *TECHNICAL SPECIFICATIONS: White Oak Mine Reclamation Construction;* the General Specifications prepared by the Division of Oil, Gas and Mining entitled *GENERAL CONDITIONS FOR ABANDONED MINE RECLAMATION PROJECTS*, dated June 1988; and the Supplementary Conditions listed in the Technical Specifications cited above.

The CONTRACTOR agrees to furnish all labor, materials and equipment to complete the WORK as described the Drawings, Specifications, and addenda to the specifications which are hereby made a part of this CONTRACT by reference. It is understood and agreed by the parties hereto that all WORK will be performed as required in the Drawings and Specifications and will be subject to inspection and approval prior to final acceptance by the OWNER. The relationship of the CONTRACTOR to the OWNER hereunder is that of an independent CONTRACTOR.

End Attachment B

ATTACHMENT C
DIVISION OF OIL, GAS AND MINING
CONSTRUCTION TERMS AND CONDITIONS

ARTICLE 1. TIME OF COMPLETION. The WORK under this CONTRACT shall be commenced upon notice to proceed and shall be completed within 120 calendar days after date marked on registered receipt of said Notice to Proceed and no later than June 30, 2005. WORK delays caused by weather may, at the discretion of the OWNER, extend the completion date. CONTRACTOR also agrees to the liquidated damages provisions of Article 12.

ARTICLE 2. PAYMENT. OWNER will promptly pay for services performed by the CONTRACTOR. Vouchers for reimbursement of expenditures under this Agreement must be filed promptly with OWNER's Representative by the tenth day of the month following the month in which WORK has been performed. OWNER will withhold from payment an amount not to exceed 10% of the total CONTRACT cost, except for Mobilization, which will have 40% withheld, until all WORK has been performed by the CONTRACTOR and is approved and accepted by OWNER.

ARTICLE 3. INDEBTEDNESS. Before final payment is made, the CONTRACTOR must submit evidence including lien waivers, satisfactory to the OWNER that all payrolls, materials bills, subcontracts and outstanding indebtedness in connection with the WORK have been paid or that arrangements have been made for their payment. Payment will be made without unnecessary delay after receipt of such evidence as mentioned above and Final Acceptance of the WORK by the OWNER.

ARTICLE 4. ADDITIONAL WORK. It is understood and agreed by the parties hereto that no money will be paid to the CONTRACTOR for any additional WORK, labor or materials furnished unless a new CONTRACT in the form of a Change Order or a modification hereof for such additional materials or labor has been executed by OWNER and CONTRACTOR. The OWNER specifically reserves the right to modify or amend this CONTRACT and the total sum due hereunder either by enlarging or restricting the WORK through a change order.

ARTICLE 5. ACCEPTANCE. The WORK will be inspected for acceptance by the OWNER promptly upon receipt of notice from the CONTRACTOR that the WORK is complete and ready for inspection.

ARTICLE 6. DISPUTES PERTAINING TO PAYMENT FOR WORK. Any disputes which may arise respecting the value of any WORK done, or any WORK omitted, or of any ADDITIONAL WORK which CONTRACTOR may be required to perform, or respecting any other elements involved in this CONTRACT, will be decided by the Director of the Division of Oil, Gas & Mining, acting as the OWNER.

ARTICLE 7. TERMINATION OF CONTRACT

a. If the CONTRACTOR is adjudged bankrupt or if the CONTRACTOR makes a general assignment for the benefit of CONTRACTOR'S creditors or if a receiver is appointed on account of CONTRACTOR'S insolvency, or if CONTRACTOR or any of his/her Subcontractors violates any of the provisions of this CONTRACT, or if the CONTRACTOR does not perform the WORK according to the Specifications, the OWNER may serve written

notice upon CONTRACTOR of its intention to terminate the CONTRACT; and unless within ten (10) days after the serving of the notice, the violation ceases, the OWNER then may take over the WORK and at the expense of the CONTRACTOR, complete it by contract or by any other method it may deem advisable. The CONTRACTOR will be liable to the OWNER for any excess cost incurred by the OWNER and the OWNER may, without liability for so doing, take possession of and utilize in completing the WORK, such materials, appliances, paint, and any other property belonging to the CONTRACTOR as may be on the site of the WORK.

b. OWNER may terminate this Agreement upon thirty days written notice to CONTRACTOR in the event the U.S. Department of the Interior fails to grant to OWNER sufficient funds to meet its obligations under this Agreement. In such event, CONTRACTOR will be entitled to receive just and equitable compensation for any satisfactory WORK completed up to the time of termination.

ARTICLE 8. OWNER'S RIGHT TO WITHHOLD CERTAIN AMOUNT AND MAKE APPLICATION THEREOF. The OWNER may withhold from payment to the CONTRACTOR an amount or amounts as, in the OWNER'S judgment, may be necessary to pay just claims against the CONTRACTOR or any Subcontractor for labor and services rendered and materials furnished in and about the WORK. The OWNER in its discretion may apply the withheld amounts on the payment of such claims. In so doing the OWNER will be deemed the agent of the CONTRACTOR and payments so made by the OWNER will be considered as a payment made under the CONTRACT by the OWNER to the CONTRACTOR and the OWNER will not be liable to the CONTRACTOR for any such payments made in good faith. Such payments may be made without prior determination of the claim or claims.

ARTICLE 9. INDEPENDENT CONTRACTOR. The CONTRACTOR will be considered an independent contractor, and, as such, has no authorization, expressed or implied, to bind the State of Utah or the OWNER to any agreement, settlement, liability or understanding whatsoever, nor to perform any acts as agent for the State of Utah, except as herein expressly set forth. The compensation provided for herein will be the total compensation payable hereunder by the State of Utah or the OWNER.

ARTICLE 10. LIABILITY AND INDEMNIFICATION. It is agreed that the CONTRACTOR will at all times protect and indemnify and save harmless, the State of Utah and all institutions, agencies, departments, authorities and instrumentalities of the State of Utah and any member of their governing bodies or of their boards or commissions or any of their elected or appointed officers or any of their employees or authorized volunteers, or the private landowners who have consented to reclamation construction and/or have consented to allow ingress or egress to a reclamation site, as described in the general conditions of the project specifications which are included herein by reference, from any and all claims, damages of every kind and nature made, rendered or incurred by or in behalf of any person or corporation whatsoever, including the parties hereto and their employees that may arise, occur or grow out of any acts, actions, work or other activity done by the CONTRACTOR in the performance and execution of this CONTRACT.

ARTICLE 11. SUBCONTRACTOR. No part of this CONTRACT may be sublet by the CONTRACTOR without the prior written approval of the OWNER. The CONTRACTOR and the OWNER for themselves, their heirs, successors, executors, and administrators, hereby agree to the full performance of the covenants herein contained.

ARTICLE 12. LIQUIDATED DAMAGES. In the event the CONTRACTOR fails to complete the WORK within the time agreed upon in CONTRACTOR's schedule as set forth in Article 2, or within such additional time as may have been allowed by the OWNER, there will be deducted from any moneys due or that may become due the CONTRACTOR the sum of $781.00 per day for each and every calendar day beyond the agreed or extended completion day that the WORK remains uncompleted. Such sum is fixed and agreed upon by the OWNER and the CONTRACTOR as liquidated damages due the OWNER by reason of the inconvenience and added costs of administration, engineering and supervision resulting from the CONTRACTOR's default, and not as a penalty.

Permitting the CONTRACTOR to continue and finish the WORK or any part of it after the time fixed for its completion, or after the date to which the time for completion may have been extended, in no way operates as a waiver on the part of the OWNER of any of OWNER'S rights under the CONTRACT.

ARTICLE 13. DEFAULT: In the event of default by the CONTRACTOR, termination may be executed as described by the Termination for Default Clause of the DIVISION OF OIL, GAS AND MINING GENERAL CONDITIONS FOR ABANDONED MINE RECLAMATION PROJECTS.

ARTICLE 14. NONAPPROPRIATION OF FUNDS: Financial obligations of the OWNER payable after the current fiscal year are contingent upon funds for the purpose being appropriated, budgeted or otherwise made available. If funds are not appropriated or otherwise available to continue the payment, this contract may be terminated without penalty by giving thirty (30) days written notice.

ARTICLE 15. CERTIFICATIONS: PART A: Certification Regarding Debarment, Suspension, Ineligibility and Voluntary Exclusion – Lower Tier Covered Transactions. 1) The CONTRACTOR certifies that neither it nor its principals is presently debarred, suspended, proposed for debarment, declared ineligible, or voluntarily excluded from participation in this transaction (contract), by any Federal department or agency. 2) Where the CONTRACTOR is unable to certify to any of the statements in this certification, such prospective participant shall attach an explanation to this proposal. PART B: Certification Regarding Lobbying. The undersigned certifies, to the best of his or her knowledge and belief, that: 1) No Federal appropriated funds have been paid or will be paid, by or on behalf of the undersigned, to any person for influencing or attempting to influence an officer or employee of an agency, a Member of Congress and officer or employee of Congress, or an employee of a Member of Congress in connection with the awarding of any Federal contract, the making of any Federal grant, the making of any Federal loan, the entering into of any cooperative agreement and the extension, continuation, renewal, amendment, or modification of any Federal contract, grant, loan, or cooperative agreement. 2) If any funds other than Federal appropriated funds have been paid or will be paid to any person for influencing or attempting to influence an officer or employee of any agency, a Member of Congress, an officer or employee of Congress, or an employee of a Member of Congress in connection with this Federal contract, grant, loan, or cooperative agreement, the undersigned shall complete and submit Standard Form-LLL, "Disclosure Form to Report Lobbying," in accordance with its instructions. This certification is a material representation of fact upon which reliance was placed when this transaction was made or entered into. Submission of this certification is a prerequisite for making or entering into this transaction imposed by Section 1352, title 31, U.S. Code. Any person who fails to file the required certification shall be subject to a civil penalty of not less than $10,000 and not more than $100,000 for each such failure.

The CONTRACTOR was selected for this contract in accordance with the State of Utah, Division of Purchasing's Regulations for the Procurement of Construction and Professional Services.

DOGM Construction Terms and Conditions (revised 09/24/03)

End Attachment C

ATTACHMENT D
COST SCHEDULE

The Cost Schedule will be generated from the Bid Schedule following the award of the CONTRACT.

Performance Bond

(Title 63, Chapter 56, U. C. A. 1953, as Amended)

KNOW ALL MEN BY THESE PRESENTS:

That _____, hereinafter referred to as the "Principal," and _____, a corporation organized and existing under the laws of the State of _____, with its principal office in the City of _____, hereinafter referred to as the "Surety," are held and firmly bound unto_____, hereinafter referred to as the "Obligee," in the amount of _____ DOLLARS ($_____) for the payment whereof, the said Principal and Surety bind themselves and their heirs, administrators, executors, successors and assigns, jointly and severally, firmly by these presents.

WHEREAS, the Principal has entered into a certain written Contract with the Obligee, dated the _____ day of _____, 20_____, which Contract is hereby referred to and made a part hereof as fully and to the same extent as if copied at length herein.

NOW, THEREFORE, the condition of this obligation is such that if the said Principal shall faithfully perform the Contract in accordance with the Plans, Specifications and conditions thereof, then this obligation shall be void; otherwise it shall remain in full force and effect.

PROVIDED, HOWEVER, that this Bond is executed pursuant to the provisions of Title 63, Chapter 56, Utah Code Annotated, 1953, as Amended, and all liabilities on this Bond shall be determined in accordance with said provisions to the same extent as if it were copied at length herein.

IN WITNESS WHEREOF, the said Principal and Surety have signed and sealed this instrument this _____ day of _____, 20_____.

_____ (Seal)
Principal

WITNESS OR ATTESTATION:

_____
By

_____ _____ (Seal)
Surety

WITNESS:

_____
By

_____

STATE OF UTAH)
) SS
COUNTY OF SALT LAKE)

_____, being first duly sworn on oath, deposes and says that he/she is the Attorney-in-fact of the_____ and that he/she is duly authorized to execute and deliver the foregoing obligation that said company is authorized to execute the same, and has complied in all respects with the laws of Utah in reference to becoming sole surety upon bonds, undertakings and obligations.

_____

Subscribed and sworn to before me this
_____ day of _____, 20_____.

_____
NOTARY PUBLIC
My commission expires: _____

APPROVED AS TO FORM: ATTORNEY GENERAL'S OFFICE

Payment Bond

(Title 63, Chapter 56, U. C. A. 1953, as Amended)

KNOW ALL MEN BY THESE PRESENTS:

That _____, hereinafter referred to as the "Principal," and _____, a corporation organized and existing under the laws of the State of _____, with its principal office in the City of _____, hereinafter referred to as the "Surety," are held and firmly bound unto _____, hereinafter referred to as the "Obligee," in the amount of _____ DOLLARS ($_____) for the payment whereof, the said Principal and surety bind themselves and their heirs, administrators, executors, successors and assigns, jointly and severally, firmly by these presents.

WHEREAS, the Principal has entered into a certain written Contract with the Obligee, dated the _____ day of _____, 20_____, which Contract is hereby referred to and made a part hereof as fully and to the same extent as if copied at length herein.

NOW, THEREFORE, the condition of this obligation is such that if the said Principal shall pay all claimants supplying labor or materials to him/her or his/her subcontractors in the prosecution of the work provided for in said Contract, then, this obligation shall be void; otherwise it shall remain in full force and effect.

PROVIDED, HOWEVER, that this bond is executed pursuant to the provisions of Title 63, Chapter 56, Utah Code Annotated, 1953, as amended and all liabilities on this bond to all such claimants shall be determined in accordance with said provisions to the same extent as if it were copies at length herein.

IN WITNESS WHEREOF, the said Principal and Surety have signed and sealed this instrument this _____ day of _____, 20_____.

_____

(Seal)

Principal

WITNESS OR ATTESTATION:

_____

By

_____

_____

(Seal)

Surety

WITNESS:

_____

By

_____

STATE OF UTAH)
) SS
COUNTY OF SALT LAKE)

_____, being first duly sworn on oath, deposes and says that he/she is the Attorney-in-fact of the_____ and that he/she is duly authorized to execute and deliver the foregoing obligation that said company is authorized to execute the same, and has complied in all respects with the laws of Utah in reference to becoming sole surety upon bonds, undertakings and obligations.

_____

Subscribed and sworn to before me this
_____ day of _____, 20_____.

_____
NOTARY PUBLIC
My commission expires: _____

APPROVED AS TO FORM: ATTORNEY GENERAL'S OFFICE

STATE OF UTAH
CONTRACT AMENDMENT

AMENDMENT # **to CONTRACT #**

TO BE ATTACHED TO AND MADE A PART OF the above numbered contract by and between the State of Utah, Division Of Oil, Gas And Mining, referred to as STATE and, , referred to as CONTRACTOR.

Project Name Project Number

THE PARTIES AGREE TO AMEND THE CONTRACT AS FOLLOWS:

1. Contract period:
(original starting date)

(current ending date)

new ending date

2. Contract amount:
(current contract amount)

(amendment amount)

new contract amount
(add current amount to amendment amount)

3. Change Details:

Fund	Agency	Org	Approp. Unit	Activity (Mine)	Grant Category	Project or Job
100	560	2881	REG			

ITEM NO.	DESCRIPTION OF CHANGES IN QUANTITIES, UNIT PRICES, SCHEDULE, ETC.	INCREASE (DECREASE)
1.	DESCRIPTION OF CHANGES IN QUANTITIES, UNIT PRICES, SCHEDULE.	$***
2.	DESCRIPTION OF CHANGES IN QUANTITIES, UNIT PRICES, SCHEDULE.	$***
3.	DESCRIPTION OF CHANGES IN QUANTITIES, UNIT PRICES, SCHEDULE	$***
4.	SUBTOTAL	$***
5.	BONDS & INSURANCE (6% of Change Order Amount)	$***
6.	TOTAL AMOUNT OF CHANGE ORDER	$***

4. Effective Date of Amendment:
All other conditions and terms in the original contract remain the same.
IN WITNESS WHEREOF, the parties sign and cause the amendment to be executed.

Approved by
Contract Rep: _____ Date: _____
Approved by
AMR Admin: _____ Date: _____
Accepted by
Contractor: _____ Date: _____
Approved by
DOGM Budget Off: _____ Date: _____
Approved by
DOGM Director _____ Date: _____
Approved by
Div'n Purchasing: _____ Date: _____
Approved by
Div'n of Finance: _____ Date: _____

Certificate Of Substantial Completion

UTAH DIVISION OF OIL, GAS AND MINING

PROJECT WHITE OAK MINE PROJECT PROJECT NO. AMR/007/934
CONTRACT NO. # _____

The WORK performed under the subject CONTRACT has been reviewed on this date and found to be substantially completed.

DEFINITION OF SUBSTANTIAL COMPLETION

The date of substantial completion of a project or specified area of a project is the date when the construction is sufficiently completed in accordance with the Contract Documents, as modified by any change orders agreed to by the parties, so that the OWNER can occupy the project or specified area of the project for the use for which it was intended.

A list of items to be completed or corrected, prepared by the Division of Oil, Gas & Mining and verified by the OWNER, is appended hereto. This list may not be exhaustive, and the failure to include an item on it does not alter the responsibility of the CONTRACTOR to complete all the WORK in accordance with the Contract Documents, including authorized changes thereof.

Division of Oil, Gas & Mining _____
CONTRACT REPRESENTATIVE DATE

The CONTRACTOR will complete or correct the work on the list of items appended hereto within ____ days from the above date of issuance of this Certificate.

_____ _____
CONTRACTOR AUTHORIZED REPRESENTATIVE DATE

The OWNER accepts the project or specified area of the project as substantially complete and will assume full possession of the project or specified area of the project at _____ (time) on _____ (date).

Division of Oil, Gas & Mining _____
OWNER CONTRACT REPRESENTATIVE DATE

_____
ADMINISTRATOR, AMR DATE

RESPONSIBILITIES AND/OR EXCEPTIONS:

This form used by permission of A.I.A.
DIVISION OF FACILITIES CONSTRUCTION AND MANAGEMENT

Certificate Of Final Acceptance

UTAH DIVISION OF OIL, GAS AND MINING

PROJECT WHITE OAK MINE PROJECT PROJECT NO. AMR/007/934
CONTRACT NO. #

The WORK performed under the subject CONTRACT has been reviewed on this date and found to be completed.

DEFINITION OF FINAL ACCEPTANCE

The date of final acceptance of a project is the date when the construction is completed in accordance with the Contract Documents, as modified by any change orders agreed to by the parties, so that the OWNER can occupy the project for the use for which it was intended.

Items listed on the Certificate of Substantial Completion, as prepared by the Division of Oil, Gas & Mining, have been completed or corrected and verified by the OWNER as having been completed or corrected.

Division of Oil, Gas & Mining
OWNER

INSPECTOR DATE

CONTRACT REPRESENTATIVE DATE

CONTRACTOR

AUTHORIZED REPRESENTATIVE DATE

The OWNER accepts the project as complete and will assume full possession of the project or specified area of the project at _____pm (time) on _____, 20__ (date).

Division of Oil, Gas & Mining
OWNER

ADMINISTRATOR, AMRP DATE

General Conditions
For
Abandoned Mine Reclamation Projects

CONTENTS

1. Definitions
2. Correlation and Intent of Documents
3. Copies Furnished
4. Dimensions
5. Detail Drawings and Instructions
6. Drawings and Specifications on the Work
7. Ownership of Drawings
8. Shop Drawings
9. Samples
10. Materials, Appliances, Employees
11. Royalties and Patents
12. Surveys, Permits and Regulations
13. Protection of WORK and Property
14. Inspection of WORK
15. Superintendence and Supervision
16. Changes
17. Claims Based on OWNER's Actions or Omissions
18. Deductions for Uncorrected Work
19. Delays and Extension of Time
20. Correction of WORK Before Final Payment
21. Correction of WORK After Final Payment
22. Termination for Default Clause
23. Application for Payments
25. Liability Insurance
26. Property Insurance
27. Indemnification
28. Guarantee Bonds
29. Liens
30. Assignment
31. Mutual Responsibility of CONTRACTORs
32. Separate Contracts
33. Subcontractors
34. Relations of CONTRACTOR and Subcontractor
35. State's Inspection
36. Contract Representative's Status
37. Contract Representative's Decisions
38. Cash Allowances
39. Use of Premises
40. Cutting, Patching and Digging
41. Cleaning Up
42. Substitutions
43. Laying Out WORK
44. Emergencies
45. Testing of Materials
46. Temporary Enclosing, Drying Out, Etc.
47. Examination of Site
48. Storage and Care of Materials
49. Construction Risks
50. Temporary Appurtenances and Conveniences
51. Scaffolding, Tools, Etc.
52. Sanitary Provisions
53. Refuse
54. Removing Water
55. Taxes
56. Citizens Preferred
57. Code Requirements
58. Nondiscrimination and Affirmative Action
59. Affirmative Action
60. Safety
61. Rubbish Disposal
62. Subcontractors Financial Bid Limits and License Classification
63. Balancing and Testing
64. Substantial Completion
65. Other Prohibited Interests
66. Conflicting Conditions
67. Monthly Progress Meetings
68. Suspension of WORK
69. Differing Site Conditions
70. Price Adjustment
71. Termination for Convenience of the OWNER
72. Liquidated Damages
73. Termination for Breach, Etc.
74. Normal Daylight Hours
75. Normal Working Days
76. Use of Explosives
77. Compliance with Copeland Regulations
78. Overtime Compensation
79. Clean Air and Water

DIVISION OF OIL, GAS AND MINING
GENERAL CONDITIONS FOR
ABANDONED MINE RECLAMATION PROJECTS

1. Definitions:

A. The CONTRACT documents consist of the agreement, the general conditions of the CONTRACT, the drawings and specifications, including all modifications thereof incorporated in the documents before their execution. These form the CONTRACT.

B. The OWNER and the CONTRACTOR or pronouns used in place thereof, are those mentioned as such in the agreement. They are treated throughout the CONTRACT documents as if each were in the singular number.

C. The term "Subcontractor," as employed herein, includes anyone having a direct CONTRACT with anyone except the OWNER to provide material and/or labor under this CONTRACT, and it includes one who furnishes material worked to a special design according to the plans and/or specifications of this WORK, but does not include one who merely furnishes material not so worked.

D. The word "state," or pronoun used in place thereof, is to designate the State of Utah, as represented by the Division of Oil, Gas & Mining.

E. The word "OWNER," or pronoun used in place thereof, is to designate the State of Utah, as represented by the Division of Oil, Gas & Mining.

F. The term "WORK" of the CONTRACTOR or subcontractor includes labor or materials or both, and the SCOPE OF WORK.

G. The term "site" shall be used to refer to all areas where the WORK is to be performed.

H. The term "engineer" shall be used to refer to a consultant representing the OWNER or a designated representative of the OWNER.

I. The applicable laws and regulations of the State of Utah shall govern the execution of the WORK embodied in the contract documents.

2. Correlation and Intent of Documents:

The CONTRACT documents are complementary, and what is called for by any one shall be as binding as if called for by all. The intention of the documents is to include all labor and materials, equipment, and transportation necessary for the proper and complete execution of the WORK, and equal in quality and workmanship to the highest standards. The CONTRACTOR is to abide by and comply with the true intent and meaning of all drawings and specifications taken as a whole and is not to avail himself to the detriment of the WORK, of any manifestly unintentional error or omission, should any exist. All minor details of WORK which are not shown on the plans, as well as such items as are not specifically mentioned in the specifications but are obviously necessary for the proper completion of the WORK, shall be considered as incidental and as being part of the WORK.

3. Copies Furnished:

Unless otherwise provided in the CONTRACT documents, the OWNER will furnish the CONTRACTOR, free of charge to the CONTRACTOR, copies of drawings and specifications, reasonably necessary for the execution of the WORK.

4. Dimensions:

Where no figures or memoranda are given, the drawings shall be accurately followed according to their scale, but figures or memoranda are to be preferred to the scale, in all cases of difference, and the larger scale details shall take preference over those of smaller scale.

5. Detail Drawings and Instructions:

The OWNER shall furnish, with reasonable promptness, additional instructions, by means of drawings or otherwise, necessary for the proper execution of the WORK. All such drawings and instructions shall be consistent with the CONTRACT documents, true developments thereof, and reasonably inferable therefrom. The WORK shall be executed in conformity with the drawings and instructions. Any WORK performed by the CONTRACTOR in advance of these drawings and instructions shall be entirely at the CONTRACTOR's risk.

6. Drawings and Specifications on the Work:

The CONTRACTOR shall keep at the jobsite one copy of all drawings and specifications on the WORK in good order, available to the OWNER and their representatives.

7. Ownership of Drawings:

All copies of drawings and specifications furnished the CONTRACTOR by the OWNER are the property of the OWNER. They are not to be used by the CONTRACTOR on other work, and are to be returned to the OWNER, upon request, at the completion of the WORK.

8. Shop Drawings/As Built Drawings:

The CONTRACTOR shall submit to the OWNER, with such promptness as to cause no delay in his/her WORK or in that of any other CONTRACTOR, six copies of all shop/as built drawings or setting drawings and schedules required for the WORK of the various trades and the OWNER shall pass upon them with reasonable The CONTRACTOR shall submit to the OWNER, with such promptness, making desired corrections. Said corrections shall pertain to conformance with the basic design concepts embodied in the CONTRACT documents. The CONTRACTOR shall make any corrections required by the OWNER. The OWNER shall distribute the corrected drawings as follows: Two drawings to the OWNER; three drawings back to the general CONTRACTOR; and one drawing to the project inspector (if one is assigned to the job). The OWNER's

approval of such drawings or schedules shall not relieve the CONTRACTOR from responsibility for deviations from drawings or specifications, unless he/she has in writing called the OWNER's attention to such deviations at the time of submission, and has received the OWNER's written approval of such deviation; nor shall it relieve him/her from responsibility for errors of any sort in shop/as built drawings or schedules.

9. Samples:

The CONTRACTOR shall furnish to the OWNER for approval, all samples as directed. The WORK shall be in accordance with approved samples.

10. Materials, Appliances, Employees:

Unless otherwise stipulated, the CONTRACTOR shall provide and pay for all materials, labor, water, tools, equipment, light, power, transportation, and other facilities and services necessary for the execution and completion of the WORK.

Unless otherwise specified, all materials shall be new, and both workmanship and materials shall be of high quality. The CONTRACTOR shall, if required, furnish satisfactory evidence as to the kind and quality of materials.

The CONTRACTOR shall at all times enforce strict discipline and order among his/her employees, and shall not employ on the WORK any unfit person or anyone not skilled in the work assigned to him/her.

11. Royalties and Patents:

The CONTRACTOR shall pay all royalties and license fees. He/she shall defend all suits or claims for infringement of any patent rights and shall save the OWNER harmless from loss on account thereof.

12. Surveys, Permits and Regulations:

The OWNER shall furnish surveys necessary to establish site boundaries and existing topography. The OWNER shall provide those surveys necessary for laying out the WORK.

The CONTRACTOR shall give all notices and comply with all applicable laws, ordinances, rules and regulations bearing on the conduct of the WORK as drawn and specified. If the CONTRACTOR observes that the drawings and specifications are at variance therewith, he/she shall promptly notify the OWNER in writing, and any necessary changes shall be adjusted as provided in the contract for changes in the WORK. If the CONTRACTOR performs any work knowing it to be contrary to such laws, ordinances, rules and regulations and without such notice to the OWNER, he/she shall bear all costs arising therefrom.

Inasmuch as the WORK under this contract will be performed for the State of Utah, it will not be necessary to take out local building permits, electrical permits and plumbing permits, nor will it be necessary to pay fees for inspections pertaining thereto; however, it will be necessary to obtain a permit from the city, county, and or Department of Transportation having jurisdiction whenever the WORK involves their property. The CONTRACTOR shall cooperate as necessary with these jurisdictions to comply with all their requirements, which may include a bond and permit fee.

Fees for connection to utilities such as water and power must be borne by the CONTRACTOR.

13. Protection of Work and Property:

The CONTRACTOR shall continuously maintain adequate protection of all his/her WORK from damage and shall protect the OWNER's property from injury or loss arising in connection with this CONTRACT. CONTRACTOR shall make good any such damage, injury, or loss, except such as may be directly due to errors in the CONTRACT documents or caused by agents or employees of the OWNER. CONTRACTOR shall adequately protect adjacent property as provided by law and the CONTRACT documents.

The CONTRACTOR shall take all necessary precautions for the safety of employees on the WORK and shall comply with all applicable provisions of federal, state and municipal safety laws and building codes to prevent accidents or injury to persons on, about, or adjacent to the premises where the WORK is being performed. CONTRACTOR shall erect and properly maintain at all times, as required by the conditions and progress of the WORK, all necessary safeguards for the protection of workers and the public and shall post danger signs warning against hazardous conditions.

14. Inspection of Work:

The OWNER and the representatives thereof and authorized federal government inspectors shall at all times have access to the WORK, and the CONTRACTOR shall provide proper facilities for such access and for inspection.

If the specifications or the OWNER requires any work to be specially tested or approved, the CONTRACTOR shall give the OWNER timely notice of its readiness for inspection. Inspections shall be promptly made and, where practicable, at the source of supply. If any WORK should be covered up without approval or consent of the OWNER, it must, if required by the OWNER, be uncovered for examination at the CONTRACTOR's expense.

15. Superintendence and Supervision:

The CONTRACTOR shall keep on the WORK, during its progress, a competent superintendent and any necessary assistants, all satisfactory to the OWNER. The superintendent shall represent the CONTRACTOR in his/her absence, and all directions given to superintendent shall be as binding as if given to the CONTRACTOR.

The CONTRACTOR shall give efficient supervision to the WORK, using his/her best skill and attention. CONTRACTOR shall carefully study and compare all drawings, specifications and other instructions, and shall

at once report to the OWNER any error, inconsistency, or omission which CONTRACTOR may discover, but shall not be held responsible for their existence or discovery.

16. Changes:

A. Change Order. The OWNER, at any time, unilaterally and without notice to sureties, in writing designated or indicated to be a change order, may order:

(1) Changes in the WORK within the scope of this CONTRACT;

(2) Changes in the time for performance of this CONTRACT that do not alter the scope of WORK of this CONTRACT; and/or

(3) Changes necessary to continue the WORK or to accommodate the OWNER with essential services required to complete the WORK as normally intended in accordance with specifications.

B. Adjustments of Price or Time for Performance. If any change order increases or decreases the CONTRACTOR's cost of, or the time required for, performance of any part of the WORK under this CONTRACT, whether changed or not changed by any such change order, an equitable adjustment shall be made in the contract price or completion date, or both, and this contract shall be modified in writing accordingly. Any adjustment in contract price made pursuant to this clause shall be determined in accordance with the Price Adjustment Clause of this contract.

Failure of the parties to agree to an adjustment shall not excuse the CONTRACTOR from proceeding with this contract as changed, provided that the OWNER promptly and duly makes such provisional adjustments in payments or time for performance as the OWNER deems to be reasonable.

C. Written Certification. No change order shall be authorized without a written certification, signed by an official of the OWNER responsible for monitoring and reporting the status of the costs of the total project or the contract budget, stating that funds are available therefor.

Where the OWNER has assigned an engineer to the project, the CONTRACTOR shall submit such proposals to the engineer in sufficient number that one copy may be transmitted to the OWNER, one to the project inspector, and one retained by the engineer. Upon acceptance of the proposal by all parties, a written change order will be issued.

Whenever a request for a change order proposal is received by the CONTRACTOR, he/she shall indicate thereon his/her proposed price to be added or deducted from the CONTRACT sum due to the change, together with his/her request for any adjustment in time of final completion of the entire CONTRACT.

It is further agreed that all time extensions to the completion date of the CONTRACT and any costs or changes in the CONTRACT price from any cause whatsoever that may be incurred as a result of the change order(s) are included in the change order as authorized.

17. Claims Based on OWNER's Actions or Omissions:

Notice of Claim. If any action or omission on the part of the OWNER, requiring performance changes within the scope of the CONTRACT and which are not covered by other clauses of this CONTRACT, constitutes the basis for a claim by the CONTRACTOR for additional compensation, damages, or an extension of time for completion, the CONTRACTOR shall continue the performance of the CONTRACT in compliance with the directions or orders of the OWNER, but by so doing, the CONTRACTOR shall not be deemed to have prejudiced any claim for additional compensation, damages, or an extension of time for completion; provided:

(1) The CONTRACTOR shall have given written notice to the OWNER:

(a) Prior to the commencement of the WORK involved, if at that time the CONTRACTOR knows of the occurrence of such action or omission; or

(b) Within thirty (30) days after the CONTRACTOR knows of the occurrence of such action or omission, if the CONTRACTOR did not have such knowledge prior to the commencement of the WORK; or

(c) Such further time as may be allowed by the OWNER in writing.

This notice shall state that the CONTRACTOR regards the act or omission as a reason which may entitle the CONTRACTOR to additional compensation, damages, or an extension of time. The OWNER, upon receipt of such notice, may rescind such action, remedy such omission, or take such other steps as may be deemed advisable in the discretion of the OWNER.

(2) The notice required by Subparagraph (A)(1) of this paragraph describes as clearly as practicable at the time the reasons why the CONTRACTOR believes that additional compensation, damages, or an extension of time may be remedies to which the CONTRACTOR is entitled; and

(3) The CONTRACTOR maintains and, upon request, makes available to the OWNER within a reasonable time, detailed records to the extent practicable, of the claimed additional costs or basis for an extension of time in connection with such changes.

18. Deductions for Uncorrected Work:

If the OWNER deems it inexpedient to correct WORK damaged or done not in accordance with the CONTRACT, an equitable deduction from the CONTRACT price shall be made therefor.

19. Delays and Extension of Time:

If the CONTRACTOR is significantly delayed at any time in the progress of the WORK by any act or neglect of the OWNER, or of any employee of either, or by any separate CONTRACTOR employed by the OWNER, or by significant changes ordered in the WORK or by strikes, lockouts, fire, unavoidable casualties or any causes beyond the CONTRACTOR's control, or by any cause which the OWNER shall decide justifies the delay, then the time of completion shall be extended for such reasonable time as the OWNER may decide. No action shall lie against the OWNER for damages or other claims due to losses attributable to hindrances or delays from any cause whatsoever, including acts and omissions of the OWNER or its agents; however, the CONTRACTOR may receive an extension of time in which to complete the WORK under this CONTRACT as provided above. The right to apply for such an extension of time shall be the exclusive remedy available to the CONTRACTOR or any Subcontractor as against the OWNER for such loss.

Any request for extension of time shall be made to the OWNER in writing within seven (7) days from the time of occurrence of cause for delay. In case of a continuing cause of delay, only one claim is necessary.

20. Correction of WORK Before Final Payment:

The CONTRACTOR shall promptly remove from the premises all WORK condemned by the OWNER as failing to conform to the CONTRACT, whether incorporated or not, and the CONTRACTOR shall promptly replace and reexecute his/her own WORK in accordance with the CONTRACT and without expense to the State of Utah and shall bear the expense of making good all WORK of other CONTRACTORS destroyed or damaged by such removal or replacement.

If the CONTRACTOR does not remove such condemned WORK within a reasonable time, fixed by written notice, the OWNER may have the materials removed and stored at the expense of the CONTRACTOR.

21. Correction of WORK After Final Payment:

Neither the final certificate of payment nor any provision in the CONTRACT documents nor partial or entire occupancy of the premises by the OWNER shall constitute an acceptance of WORK not done in accordance with the CONTRACT documents or relieve the CONTRACTOR of liability in respect to any express warranties or responsibility for faulty materials or workmanship. The CONTRACTOR shall remedy any defects in the WORK and pay for any damage to other WORK resulting therefrom which shall appear within a period of one year from the date of substantial completion of the WORK, unless a longer period is specified. The OWNER will give notice of observed defects with reasonable promptness.

22. Termination for Default Clause:

A. The OWNER may, subject to the provisions of Paragraph (C) below, by written notice of default to the CONTRACTOR, terminate the whole or any part of this CONTRACT in any one of the following circumstances:

(1) If the CONTRACTOR fails to perform this CONTRACT within the time specified herein or any extension thereof; or

(2) If the CONTRACTOR fails to perform any of the other provisions of this CONTRACT, or so fails to make progress as to endanger performance of this CONTRACT in accordance with its terms, and in either of these two circumstances does not cure such failure within a period of five (5) days (or such longer period as the OWNER may authorize in writing) after receipt of notice from the OWNER specifying such failure.

B. In the event the OWNER terminates this CONTRACT in whole or in part as provided in Paragraph (A) of this clause, the OWNER may procure, upon such terms and in such manner as the OWNER may deem appropriate, supplies or services similar to those so terminated, and the CONTRACTOR shall be liable to the OWNER for any excess costs for such similar supplies or services; provided that the CONTRACTOR shall continue the performance of this CONTRACT to the extent not terminated under the provisions of this clause.

C. Except with respect to defaults of Subcontractors, the CONTRACTOR shall not be liable for any excess costs if the failure to perform the CONTRACT arises out of causes beyond the control and without the fault or negligence of the CONTRACTOR. Such causes may include, but are not restricted to, acts of God or of the public enemy, acts of the state or federal government in either their sovereign or contractual capacity, fires, floods, epidemics, quarantine restrictions, strikes, freight embargoes, and unusually severe weather; but in every case the failure to perform must be beyond the control and without the fault or negligence of the CONTRACTOR. If the failure to perform is caused by the default of a Subcontractor, and if such default arises out of causes beyond the control of both the CONTRACTOR and the Subcontractor, and without the fault or negligence of either of them, the CONTRACTOR shall not be liable for any excess costs for failure to perform unless the supplies or services to be furnished by the Subcontractor were obtainable from other sources in sufficient time to permit the CONTRACTOR to meet the required delivery or completion schedule.

If this CONTRACT is terminated as provided in Paragraph (A) of this clause, the OWNER, in addition to any other rights provided in this clause, may take over the WORK and prosecute the same to completion, by contract or otherwise, and may take possession of, and utilize in completing the WORK, such materials, equipment and plants as may be on the site of the WORK and necessary therefor. The OWNER may require the CONTRACTOR to transfer title and deliver to the OWNER, in the manner and to the extent directed

by the OWNER:

(1) Any completed portion of the WORK; and

(2) Any partially completed portion of the WORK and any parts, tools, dies, jigs, fixtures, plans, drawings, information, and CONTRACT rights (hereinafter called "construction materials") as the CONTRACTOR has specifically produced or specifically acquired for the performance of such part of this CONTRACT as has been terminated; and the CONTRACTOR shall, upon direction of the OWNER, protect and preserve property in the possession of the CONTRACTOR in which the OWNER has an interest.

Payment for completed WORK accepted by the OWNER shall be at the contract price. Payment for construction materials delivered to and accepted by the OWNER and for the protection and preservation of property shall be in an amount agreed upon by the CONTRACTOR and OWNER. The OWNER may withhold from amounts otherwise due the CONTRACTOR for such completed WORK or construction materials such sum as the OWNER determines to be necessary to protect the OWNER against loss because of outstanding liens or claims of former lien holders.

E. If, after notice of termination of the contract under the provisions of this clause, it is determined for any reason that the CONTRACTOR was not in default under the provisions of this clause, or that the default was excusable under the provisions of this clause, the rights and obligations of the parties shall, if the CONTRACT contains a clause providing for termination for convenience of the OWNER, be the same as if the notice of termination had been issued pursuant to such clause. If, after notice of termination of this CONTRACT under the provisions of this clause, it is determined for any reason that the CONTRACTOR was not in default under the provisions of the clause, and if this CONTRACT does not contain a clause providing for termination for convenience of the OWNER, the CONTRACT shall be equitably adjusted to compensate for such termination and the contract modified accordingly.

F. The rights and remedies of the OWNER provided in this clause shall not be exclusive and are in addition to any other rights and remedies provided by law or under this CONTRACT.

23. Application for Payments:

The CONTRACTOR shall submit an application monthly for progress payments to the OWNER for approval. The CONTRACT REPRESENTATIVE shall approve the payment, and obtain the signature of the inspector for payment. Receipts or other vouchers showing payments for the materials and labor, including payments to Subcontractors, for the preceding month shall be submitted with the application if required.

If payments are made on valuation of WORK done, such application shall be submitted at least ten days before each payment falls due. The CONTRACTOR shall, before the first application, submit to the OWNER, a schedule of values for the various parts of the WORK, including quantities, aggregating the total sum of the CONTRACT, divided so as to facilitate payments as outlined above and made out in such form as the OWNER and the CONTRACTOR may agree upon, and supported by such evidence as to its correctness as the OWNER may direct. This schedule, when approved by the OWNER, shall be used as a basis for payment, unless it be found to be in error. In applying for payments, the CONTRACTOR shall submit in duplicate a statement based upon this schedule and itemized in such form and supported by such evidence as the OWNER may direct, s howing CONTRACTOR's right to the payment claimed.

In making payments to the CONTRACTOR for completed WORK or for materials stored on site, it is understood between the OWNER and the CONTRACTOR that proportionate parts of such payments as are made to the CONTRACTOR for completed WORK of Subcontractors and/or suppliers will be transmitted to such Subcontractors and/or suppliers in the form of payments for completed WORK within ten (10) days after receipt of such payments by the CONTRACTOR. The submittal of an application by a CONTRACTOR for a progress payment shall constitute prima facie representation by that CONTRACTOR that all previous proportionate payments made by the OWNER to the CONTRACTOR for completed WORK of Subcontractors and/or suppliers have been transmitted to all appropriate Subcontractors and/or suppliers for their completed WORK within ten (10) days after receipt of respective payments.

For projects in excess of $100,000, the CONTRACTOR may request retainage to be paid to an escrow agent for interest to accrue to the CONTRACTOR's benefit. See OWNER for forms and more information.

24. OWNER's Right to Withhold Certain Amounts and Make Application Thereof:

The OWNER may withhold from payment to the CONTRACTOR such an amount or amounts as, in its judgment, may be necessary to pay just claims against the CONTRACTOR or any Subcontractor for labor and services rendered and materials furnished in and about the WORK. The OWNER may apply such withheld amounts on the payment of such claims in its discretion. In so doing, the OWNER shall be deemed the agent of the CONTRACTOR and payments so made by the OWNER shall be considered as a payment made under the CONTRACT by the OWNER to the CONTRACTOR and the OWNER shall not be liable to the CONTRACTOR for any such payments in good faith made. Such payments may be made without prior determination of the claim or claims.

Neither the final certificate of payment nor any provision in the CONTRACT documents, nor partial or entire occupancy of the premises by the OWNER shall constitute an acceptance of WORK not done in accordance with the contract documents or relieve the CONTRACTOR of liability in respect to any express warranties or responsibility for faulty materials or workmanship. The CONTRACTOR shall remedy any defects in the WORK and pay for any damage to other

WORK resulting therefrom, which shall appear within a period of one year from the date of the certificate of substantial completion of the WORK, unless a longer period is specified. The OWNER will give notice of observed defects with reasonable promptness.

25. Liability Insurance:

To protect against liability, loss, or expense arising from damage to property or injury or death of any person or persons incurred in any way out of, in connection with or resulting from the WORK provided hereunder, CONTRACTOR shall obtain at its own expense from reliable insurance companies acceptable to OWNER's Risk Manager and authorized to do business in the state in which the work is to be performed, and shall maintain in full force during the entire period of this contract the following or equivalent insurance:

(a) Workers' Compensation Insurance and Employers' Liability Insurance providing statutory benefits.

(b) Comprehensive General Liability Insurance, including premises-operations; explosion; collapse and underground hazards; products and completed operation hazards; blanket contractual; broad form property damage; independent CONTRACTORs; and personal injury including employees with limits not less than $1,000,000 combined single limit per occurrence.

(c) Comprehensive Automobile Liability Insurance including owned, hired and non-owned automobiles with limits not less that $1,000,000 combined single limit per occurrence.

(d) CONTRACTOR using its own aircraft, or employing aircraft in connection with the WORK performed under this contract shall maintain Bodily Injury and Property Damage Liability coverage with a combined single limit of not less than $1,000,000 per occurrence.

Any policy required by this section may be arranged under a single policy for the full limit required, or by a combination of underlying policies with the balance provided by an Excess or Umbrella Liability policy.

OWNER may accept equivalent self-insured programs in lieu of insurance upon specific approval of OWNER's Risk Manager.

Irrespective of the requirements as to insurance to be carried by CONTRACTOR as provided herein, insolvency, bankruptcy or failure of any insurance company to pay all claims accruing, shall not be held to relieve CONTRACTOR of any obligations hereunder.

The State of Utah and all Institutions, Agencies, Departments, Authorities and Instrumentalities of the State of Utah, and while acting within the scope of their duties as such: any member of their governing bodies, or of their boards, commissions, or advisory committees, or any of their elected or appointed officials, or any of their employees or authorized volunteers shall be listed as additional insureds under each of the policies required to be purchased and maintained by CONTRACTOR, with the exception of Workers' Compensation. Each policy so required shall be primary to the aforesaid additional insureds listed above, and shall apply to the full policy limits prior to any other insurance coverage which the aforesaid additional insureds may have in the event of claim under any of said policies, but, only with respect to WORK being performed by CONTRACTOR on behalf of the aforesaid additional insureds.

Before the WORK is commenced, certificates evidencing that satisfactory coverage of the type and limits set forth above are in effect, shall be furnished to the OWNER. Such insurance policies shall contain provisions that no alteration, cancellation or material change therein shall become effective except upon thirty (30) days prior written notice to OWNER's Risk Manager as evidenced by return of registered or certified letter sent to OWNER's Risk Manager.

Any and all deductibles in the above described policies shall be assumed by, for the account of, and at sole risk of CONTRACTOR.

26. Property Insurance:

OWNER shall provide "all risk" property insurance to protect OWNER, as well as all CONTRACTORs, Subcontractors and sub-subcontractors with respect to WORK performed hereunder at OWNER's own cost and expense, according to the policy forms currently in force with insurance carriers selected by OWNER's Risk Manager. OWNER's Risk Manager will furnish, upon request, all parties in interest with copies of said policies authenticated by authorized agents of the insurers or the State Risk Management Fund.

The above described policies shall be subject to a total deductible of $500.00 per loss occurrence, which shall be assumed by all insureds in proportion to their share of the total amount of an insured loss occurrence.

Any insured property loss is to be adjusted with the OWNER's Risk Manager, and made payable to the OWNER's Risk Manager as trustee for the insureds, as their interests may appear, subject to the requirements of any applicable loss payable clause.

CONTRACTOR and OWNER hereby waive all rights against each other for damages caused by perils insured against under the property insurance provided by OWNER, except such rights as CONTRACTOR may have to the proceeds of such insurance held by the OWNER's Risk Manager as trustee.

If the CONTRACTOR requests in writing that insurance for special hazards be included in the property insurance policy, the OWNER's Risk Manager shall, if possible, include such insurance, and the cost thereof shall be charged to the CONTRACTOR by appropriate change order.

27. Indemnification:

"Indemnities" shall be defined for the purposes of this section: the State of Utah and all institutions, agencies, departments, authorities, and instrumentalities of the

State of Utah, and any member of their governing bodies, or of their boards or commissions, or any of their elected or appointed officers, or any of their employees or authorized volunteers.

The CONTRACTOR will protect, indemnify and hold harmless indemnities from every kind and character of damages, losses, expenses, demands, claims and causes of action arising against indemnities and their Subcontractors, their officers, agents, employees or any other person, firm or corporation whatsoever from, against, or on account of any and all claims damages, losses, demands causes of action and expenses (including attorney's fees) arising out of or resulting from any violation or alleged violation by CONTRACTOR, his officers, agents and employees, or his Subcontractors or their officers, agents and employees of any federal, state or local law, statute or ordinance, relating to the WORK to be performed by the CONTRACTOR on the project growing out of or incident to the WORK to be performed and operations to be conducted by CONTRACTOR, or his Subcontractors, under this agreement, whether such claims, death or damages, result from or are claimed to have resulted from the negligence of CONTRACTOR, his officers, agents or employees, or his Subcontractors, their officers, agents, employees, or whether resulting from or alleged to have resulted from the concurrent negligence of indemnities and/or CONTRACTORs, their officers, agents or employees. The CONTRACTOR, at his own expense, shall defend any suit or action brought against OWNER based on any such alleged injury, death or damage, and shall pay all damages, costs and expenses, including attorney's fees in connection therewith or in any manner resulting therefrom. Such damages will include all the injuries or damages occasioned by the failure of, use of, or misuse of any and all kinds of equipment, whether owned or rented by CONTRACTOR or furnished by a Subcontractor.

The OWNER shall be fully informed by the CONTRACTOR of settlement negotiations regarding any matter referred to in the preceding paragraph and shall first approve any settlement to be made by CONTRACTOR. Any such settlement shall include a release of all claims relating to OWNER. The form copy of all releases obtained shall be furnished by OWNER. If CONTRACTOR is unable to make settlement of any such claims within fifteen (15) days after the final completion date, the OWNER reserves the right, at his/her option, to either make settlement of the claim and charge the amount to CONTRACTOR or to withhold the dollar amount, in whole or in part, of the claim or claims in question from payment to CONTRACTOR until OWNER receives a release for such claim or claims.

In any and all claims against indemnities by any employee or CONTRACTOR, any Subcontractor, anyone directly or indirectly employed by any of them or anyone for whose acts any of them may be liable, the indemnification obligation under this article shall not be limited in any way by any limitation on the amount or type of damages, compensation or benefits payable by or for CONTRACTOR or any Subcontractor under workers' compensation acts, disability benefit acts or other employee benefit acts.

The CONTRACTOR shall indemnify and hold harmless indemnities from all claims, demands, causes of action or suits of whatever nature arising out of services, equipment, supplies, materials and/or labor furnished by CONTRACTOR or its Subcontractors under this agreement; from all labor and/or mechanic or materialmen liens upon the real property upon which the work is located arising in favor of laborers and/or materialmen, Subcontractors and suppliers, out of services, equipment, supplies, materials and/or labor furnished by CONTRACTOR or any of his/her Subcontractors from all liens, claims and encumbrances arising from the performance of CONTRACTOR or his/her Subcontractors.

28. Guarantee Bonds:

The CONTRACTOR shall include in his/her bid, as part of the quoted total, all costs involved in securing and furnishing the following bonds based on the completed cost of the CONTRACT:

(a) A full 100% performance bond covering the faithful execution of the CONTRACT; and

(b) A full 100% payment bond of all obligations arising thereunder.

29. Liens:

Neither the final payment nor any part of the retained percentage shall become due until the CONTRACTOR, if required, shall deliver to the OWNER a complete release of all liens arising out of this CONTRACT, or receipts in full in lieu thereof, and, if required in either case, an affidavit that so far as CONTRACTOR has knowledge or information the releases and receipts include all the labor and materials for which a lien could be filed, but the CONTRACTOR may, if any Subcontractor refuses to furnish a release or receipt in full, furnish a bond satisfactory to the OWNER to indemnify him/her against any lien. If any lien remain unsatisfied after all payments are made, the CONTRACTOR shall refund to the OWNER all moneys that the latter may be compelled to pay in discharging such a lien, including all costs and a reasonable attorney's fee.

30. Assignment:

The CONTRACTOR shall not assign the CONTRACT or sublet it as a whole without the written consent of the OWNER, nor shall the CONTRACTOR assign any moneys due or to become due to CONTRACTOR hereunder, without the previous written consent of the OWNER.

31. Mutual Responsibility of Contractors:

Should the CONTRACTOR cause damage to any separate CONTRACTOR on the WORK, the CONTRACTOR agrees, upon due notice, to settle with such CONTRACTOR by agreement or arbitration, if he/she will so settle. If such separate CONTRACTOR sues the OWNER on account of any damage alleged to have been so sustained, the OWNER shall notify the CONTRACTOR, who shall defend such proceedings at his/her own expense, and if any judgment against the

OWNER arises therefrom, the CONTRACTOR shall pay or satisfy it in its entirety.

32. Separate Contracts:

The OWNER reserves the right to let other CONTRACTS in connection with this WORK. The CONTRACTOR shall afford other CONTRACTORs reasonable opportunity for the introduction and storage of their materials and the execution of their work and shall properly connect and coordinate his/her WORK with theirs.

If any part of the CONTRACTOR's WORK depends for proper execution or results upon the WORK of any other CONTRACTOR, the CONTRACTOR shall inspect and promptly report to the OWNER any defects in such WORK that render it unsuitable for such proper execution and results. His/her failure so to inspect and report shall constitute an acceptance of the other CONTRACTOR's work as fit and proper for the reception of his/her work, except as to defects which may develop in the other CONTRACTOR's WORK after the execution of his/her WORK. To insure the proper execution of his/her subsequent WORK, the CONTRACTOR shall measure WORK already in place and shall at once report to the OWNER any discrepancy between the executed WORK and the drawings.

33. Subcontractors:

The two apparent low bidders shall furnish to the OWNER, within twenty-four (24) hours after the opening of bids, a list of the Subcontractors by name and amounts where Subcontractors' bids are in excess of $5,000 and shall not employ any that the OWNER may, within a reasonable time, object to as incompetent or unfit. Bidders shall not list themselves or "self" under any category as Subcontractor unless the bidder intends to perform as the Subcontractor for which he/she lists "self," and unless he/she generally and regularly performs that type of subcontract WORK. The OWNER shall, on request, furnish to any Subcontractor, wherever practicable, evidence of the amounts certified on this account.

The CONTRACTOR agrees that CONTRACTOR is as fully responsible to the OWNER for the acts and omissions of his Subcontractors and of persons either directly or indirectly employed by them, as he/she is for the acts and omissions of persons directly employed by CONTRACTOR.

Nothing contained in the CONTRACT documents shall create any contractual relation between any Subcontractor or supplier and the OWNER.

34. Relations of CONTRACTOR and Subcontractor:

The CONTRACTOR agrees to bind every Subcontractor and every Subcontractor agrees to be bound by the terms of the agreement, the general conditions, and the drawings and specifications as far as applicable to his/her WORK. Nothing in this article shall create any obligation on the part of the OWNER to pay or to see to the payment of any sums to any Subcontractor.

35. State's Inspection:

The OWNER, at his/her option, may assign a inspector to the project. Such staff inspector will cooperate with the CONTRACT REPRESENTATIVE and design engineer in noting deviations from, or necessary adjustments to, the CONTRACT documents or of deficiencies or defects in the construction. The staff inspector's presence on the project, however, shall in no way relieve the CONTRACT REPRESENTATIVE of the prime responsibilities as set forth herein.

36. CONTRACT REPRESENTATIVE Status:

The OWNER shall appoint a CONTRACT REPRESENTATIVE who shall have general supervision of the work and he/she is the agent of the OWNER to the extent provided in the CONTRACT documents and when in special instances he/she is authorized by the OWNER to so act.

As the CONTRACT REPRESENTATIVE is, in the first instance, an interpreter of the conditions of the CONTRACT and a judge of its performance, he/she shall side neither with the OWNER nor with the CONTRACTOR, but shall use his/her powers under the CONTRACT to enforce its faithful performance by both.

37. CONTRACT REPRESENTATIVE's Decisions:

The CONTRACT REPRESENTATIVE shall, within a reasonable time, make decisions on all claims of the OWNER or CONTRACTOR and on all other matters relating to the execution and progress of the WORK or the interpretation of the CONTRACT documents.

38. Cash Allowances:

The CONTRACTOR shall include in the BID PRICE all allowances named in the CONTRACT documents and shall cause the WORK so covered to be done by such CONTRACTORs and for such sums as the CONTRACT REPRESENTATIVE may specify and certify, the BID PRICE being adjusted in conformity therewith, upon approval of the OWNER.

39. Use of Premises:

The CONTRACTOR shall confine apparatus, the storage of materials and the operations of his/her workers to limits indicated by law, ordinances, permit or directions of the CONTRACT REPRESENTATIVE and shall not unreasonably encumber the premises with his/her materials. The CONTRACTOR shall not load or permit any part of the equipment or structure to be loaded with a weight that will endanger its safety or the safety of any person on the premises.

40. Cutting, Patching and Digging:

The CONTRACTOR shall do all cutting, patching or fitting of his/her WORK that may be required to make its several parts come together properly and fit it to receive or be received by WORK of other CONTRACTORs shown upon, or reasonably implied by, the drawings and specifications for the completed structure, and he shall make good after them as the CONTRACT

REPRESENTATIVE may direct.

Any cost caused by defective or ill-timed work shall be borne by the party responsible therefor. The CONTRACTOR shall not endanger any WORK by cutting, digging or otherwise, and shall not cut or alter the WORK of any other CONTRACTOR save with the consent of the CONTRACT REPRESENTATIVE.

41. Cleaning Up:

The CONTRACTOR shall at all times keep the premises free from accumulations of waste material or rubbish caused by his/her employees or WORK. At the completion of the WORK, CONTRACTOR shall remove all rubbish from and about the building and all tools, scaffolding and surplus materials and shall leave his/her WORK "broom-clean" or its equivalent, unless more exactly specified. In case of dispute, the OWNER may remove the rubbish and charge the cost to the several CONTRACTORs as the CONTRACT REPRESENTATIVE may determine to be just.

42. Substitutions:

Where reference is made to one or more propriety products but restrictive descriptive material of one or more manufacturer(s) is used, it is understood that the products of other manufacturers will be accepted, provided they equal or exceed the standards set forth in the plans and specifications and are compatible with the intent and purpose of the design, subject to the written approval of the OWNER and the CONTRACT REPRESENTATIVE prior to the opening of bids. Requests for and information pertaining to said approval must be submitted to the OWNER no later than four (4) working days (not including Saturday, Sunday or state holidays) prior to bid opening. If the descriptive material is not restrictive, the products of other manufacturers specified will be accepted without prior approval provided they are compatible with the intent and purpose of the design.

The CONTRACTOR may propose the substitution of any material as a supplement to his/her bid with the monetary amount, additive or deductive as may be the case, clearly stated and shall include the manufacturer's complete descriptive information with the proposed substitution. This shall be completely apart and separate from the BID PRICE quotation and shall be solely for the information of the OWNER and the use of such proposed substitutions shall be strictly at the decision of the OWNER. If substitution is accepted by the OWNER, the CONTRACT sum shall be adjusted from the BID PRICE either up or down as indicated on the supplementary list by change order after award.

43. Laying Out WORK:

The CONTRACTOR shall be held strictly responsible for the accuracy of the laying out of his/her WORK and for its strict conformity with the existing conditions of the building and shall determine all changes and chases and openings before WORK is commenced.

44. Emergencies:

In an emergency affecting the safety of life, or of the structure or of adjoining property, then the CONTRACTOR, without special instruction or authorization from the OWNER, shall act at his/her discretion to prevent such threatened loss or injury. Any compensation claimed to be due him/her therefrom shall be determined as provided for under Article 17, "Changes."

45. Testing of Materials:

In case the CONTRACT REPRESENTATIVE direct that any materials be tested or analyzed, then the CONTRACTOR shall furnish a sample for the test, such sample being selected according to the directions of the CONTRACT REPRESENTATIVE. The cost of testing or analysis of such sample or samples shall be borne by the manufacturer or supplier of the product. This provision shall not apply to the testing of concrete. The cost of testing shall be borne by the OWNER.

46. Temporary Enclosing, Drying Out, Etc.:

If applicable when openings are made in exterior walls, the CONTRACTOR shall, if required by the OWNER on account of weather or security conditions, close up all exterior openings (except one or more which are to be provided with battened doors, padlocks, etc.) with temporary frames covered with approved material.

The CONTRACTOR must, at all times, protect the building from damage from weather, surface water or subsoil drainage. He/she must keep the excavations dry, if necessary, by pumping, while concrete or masonry is being laid.

47. Examination of Site:

The CONTRACTOR shall visit the site and examine for himself/herself the site conditions. He/she shall furnish all labor and materials necessary for preparation of the site for the execution of this CONTRACT.

48. Storage and Care of Materials:

The CONTRACTOR shall provide, maintain and remove when directed, suitable, substantial, watertight storage sheds upon the premises where directed, in which he/her shall store his/her materials. All cement, lime and other materials affected by moisture shall be covered and protected to keep from damage while it is being transported to the site.

49. Construction Risks:

The construction and all materials and WORK connected therewith shall be at the CONTRACTOR's risk until they are accepted, and he/she will be held responsible for and liable for their safety in the amount paid to him/her by the OWNER on account thereof.

50. Temporary Appurtenances and Conveniences:

The CONTRACTOR shall provide well-fastened ladders and other means to facilitate inspection of the work.

51. Scaffolding, Tools, Etc.:

The CONTRACTOR shall provide and erect all the

necessary platforms, scaffolds and supports of ample strength required for the handling of the materials and other loading to be imposed. The same shall apply to all derricks and hoisting machinery, all appliances and materials, ladders, horses, poles, plants, ropes, wedges, centers, moulds, and other tools and materials, and the cartage thereof to and from the site as may become necessary for the performance of his/her contract.

52. Sanitary Provisions:

The CONTRACTOR shall provide a chemical toilet for his workers' use. The CONTRACTOR shall keep the toilet clean, neat and in first-class condition at all times.

53. Refuse:

Refuse barrels are to be provided by the CONTRACTOR for the workers' lunch boxes and papers.

54. Removing Water:

The CONTRACTOR shall remove, at his/her expense from all excavations and/or from the site, all unwanted water appearing from any cause during any stage of the WORK until the site is accepted by the OWNER. All excavations shall be free from water before any concreting or other WORK is done in them.

55. Taxes:

The CONTRACTOR shall include in his/her BID PRICE the cost of social security, unemployment compensation, and sales and use taxes as required by federal and state laws.

56. Citizens Preferred:

Preference shall be given in hiring citizens of the United States or those having declared their intention of becoming citizens; failure to comply may result in the OWNER declaring the contract void.

57. Code Requirements:

The provisions of the 1979 Uniform Building Code, and the 1980 Supplement to Uniform Building Code and Uniform Building Code Standards, the 1981 National Electrical Code, except as specific variances therewith may be authorized by the OWNER, and the 1979 Utah Plumbing Code as amended, shall apply.

If the drawings and specifications fail to meet the minimum standards of the above-mentioned codes, it shall be the responsibility of the CONTRACTOR to bring such information to the attention of the OWNER having jurisdiction. Subcontractors shall also inform the CONTRACTOR of any infractions of the above-mentioned codes regarding their own particular trades.

In the event that workmanship or incidental materials are not specified or indicated, they shall at least conform to the above-mentioned codes and shall be incorporated into the work without any additional cost to the OWNER. If the plans and specifications call for items or workmanship which exceed the codes, the plans and specifications hold precedence over any code requirements.

58. Nondiscrimination - Equal Employment Opportunity:

In order to comply with the provisions of the Utah Anti-Discrimination Act of 1965, relating to unfair employment practices, the CONTRACTOR agrees as follows:

A. The CONTRACTOR will not discriminate against any employee or applicant for employment because of race, color, sex, religion ancestry or natural origin.

B. In all solicitations or advertisements for employees, the CONTRACTOR will state that all qualified applicants will receive consideration without regard to race, color, sex, religion, ancestry or national origin.

C. The CONTRACTOR will send to each labor union or workers' representative notices to be provided, stating the CONTRACTOR's responsibilities under the statute.

D. The CONTRACTOR will furnish such information and reports as requested by the division for the purpose of determining compliance with the statute.

E. Failure of the CONTRACTOR to comply with the statute, the rules and regulations promulgated thereunder and this nondiscrimination clause shall be deemed a breech of contract and it may be canceled, terminated or suspended in whole or in part.

F. The CONTRACTOR shall include the provisions of the above Paragraphs A through E in all subcontracts for this project.

59. Affirmative Action:

The CONTRACTOR will take affirmative action to ensure that applicants are employed and that employees are treated during employment without regard to their race, color, religion, sex or national origin. Such action shall include, but not be limited to the following: employment; upgrading; demotion or transfer; recruitment or recruitment advertising; layoff or termination; rates of pay or other forms of compensation; and selection for training, including apprenticeship.

At its discretion, the OWNER may perform a compliance review at the office and project of the CONTRACTOR to check on compliance in hiring practices, record-keeping, contracting of agencies and unions, advertising, informing of personnel of the requirements under this provision, etc. If the visit to the project site or other information received indicates need to perform a compliance review more frequently on a project, this will be done. The size of the project, complaint situation, and past record of CONTRACTOR will determine the

frequency of on-the-job compliance reviews.

60. Safety:

The CONTRACTOR shall institute a safety program at the start of construction to minimize accidents; such program to continue to the end of the job and conform to the latest general safety orders of the State Industrial Commission. The CONTRACTOR shall post signs, erect barriers, etc., as necessary to implement this program. The CONTRACTOR shall have all workers and all visitors on site wear safety hard hats and obey all safety rules and regulations and statutes as soon as the CONTRACTOR proceeds. The CONTRACTOR shall post a sign regarding hats in a conspicuous location and furnish extra hats at his/her expense for visitors.

61. Rubbish Disposal:

Rubbish, trash, etc., shall not be burned on premises unless approved by the local fire authority, but rather, hauled from the site and legally disposed of or other methods as specified by OWNER.

62. Subcontractors Financial Bid Limits and License Classification:

The CONTRACTOR shall verify the license classification and bid limit of each of his/her Subcontractors. Regulations prohibit work of the above Subcontractors exceeding their respective bid limit and working outside of license classification as determined by the Department of Business Regulation, Department of Contractors.

In the event the bid limit or classification is not complied with, the respective Subcontractor(s) mentioned above will be disqualified by the OWNER, and the CONTRACTOR shall be responsible to provide a suitable and properly qualified Subcontractor as approved by the OWNER without a change in the contract price.

63. Balancing and Testing:

It is the intent of this specification that the site, when presented to the OWNER for final acceptance, be complete and operable in all respects, including, but not limited to, mechanical, utilities, and other systems which are tuned, tested, and balanced to the satisfaction of the OWNER, or his/her appropriate engineers and consultants. Any and all testing and balancing necessary shall be done as part of the CONTRACT with the state.

During, or in connection with the inspection of the WORK, the CONTRACTOR or his/her appropriate Subcontractor(s) shall perform such tests and/or demonstrations of the operation of the systems, or its components, as may be requested by the OWNER, or his/her appropriate engineers and consultants, as necessary to adequately determine the acceptability of the installation.

64. Substantial Completion:

The OWNER will conduct inspections to determine the dates of substantial completion and final payment, will receive written guarantees and related documents required by the CONTRACT and assembled by the CONTRACTOR and submit these to the OWNER, and will issue a final certificate for payment.

The date of substantial completion of the WORK or designated portion thereof is the date certified by the OWNER when construction is sufficiently complete in accordance with the CONTRACT documents so the OWNER may occupy the site or designated portion thereof for the use for which it is intended. When the CONTRACTOR determines that the WORK, or a designated portion thereof acceptable to the OWNER, is substantially complete, the OWNER shall prepare a list of items to be completed or corrected. The failure to include any item on such list does not alter the responsibility of the CONTRACTOR to complete all WORK in accordance with the contract documents. When the OWNER, on the basis of an inspection, determines that this WORK is substantially complete, the CONTRACT REPRESENTATIVE then will prepare a Certificate of Substantial Completion which shall establish the date of substantial completion; shall state the responsibilities of the OWNER and the CONTRACTOR for maintenance, heat, utilities and insurance; and shall fix the time within which the CONTRACTOR shall complete the items listed therein, said time to be within the CONTRACT time unless extended pursuant to Article, "Delays and Extension of Time." The certificate of substantial completion shall be submitted to the OWNER and the CONTRACTOR for their written acceptance of the responsibilities assigned to them in such certificate. A sample form of the certificate of substantial completion is included in the specifications.

If within one year after the date of substantial completion or within such longer period of time as may be prescribed by law or by the terms of any applicable special guarantee required by the CONTRACT documents, any of the WORK is found to be defective or not in accordance with the CONTRACT documents, the CONTRACTOR shall correct it promptly after receipt of written notice from the OWNER to do so unless the OWNER has previously given the CONTRACTOR a written acceptance of such condition. The OWNER shall give such notice promptly after discovery of the condition.

65. Other Prohibited Interests:

No official of the OWNER who is authorized in such capacity and on behalf of the OWNER to negotiate, make, accept or approve, or to take part in negotiating, making, accepting, or approving any architectural engineering, inspection, construction or material supply contract or any subcontract in connection with the construction of the project, shall become directly interested personally in the contract or in any part hereof.

No officer, employee, attorney, engineer or inspector of or for the OWNER who is authorized in such capacity and on behalf of the OWNER to exercise any legislative, executive, supervisory or other similar functions in connection with the construction of the project shall become directly or indirectly interested personally in this

contract or in any part thereof, any material supply contract, subcontract, insurance contract, or any other contract pertaining to the project.

66. Conflicting Conditions:

Any provision in any of the CONTRACT documents which may be in conflict or inconsistent with any of the paragraphs in these general conditions shall be void to the extent of such conflict or inconsistency. In the event of conflicts of plans and specifications, the CONTRACTOR shall follow the most stringent requirements as approved by the OWNER.

67. Monthly Progress Meetings:

Monthly progress meetings may be held at the discretion of the OWNER or the general CONTRACTOR, at which time the Subcontractors and/or suppliers will be required to be present.

68. Suspension of WORK:

A. Suspension of WORK for the Convenience of the Owner. The OWNER may order the CONTRACTOR in writing to suspend, delay or interrupt all or any part of the WORK for such period of time as the OWNER may determine to be appropriate for the convenience of the OWNER.

B. Adjustment of Cost. If the performance of all or any part of the work is suspended, delayed or interrupted by an act or failure to act of the OWNER for an unreasonable period of time, an equitable adjustment in the CONTRACT price shall be made for any increase in the cost of performance of this CONTRACT necessarily caused by such unreasonable suspension, delay or interruption and an equitable adjustment of time for completion of the WORK will be allowed the CONTRACTOR and the CONTRACT shall be modified in writing accordingly. However, no adjustment shall be made under this clause for any suspension, delay or interruption to the extent:

(1) That performance would have been so suspended, delayed or interrupted by any other cause, including the fault or negligence of the CONTRACTOR; or

(2) For which an adjustment is provided or excluded under any other provision of this CONTRACT.

C. Time Period for Claims. Any claim by the CONTRACTOR for adjustment under this clause must be asserted by the CONTRACTOR, in writing, within thirty (30) days from the date of termination of such suspension, delay or interruption; provided that the OWNER may, in his/her sole discretion, receive and act upon any such claim asserted at any time prior to final payment under this CONTRACT.

D. Adjustments of Price. Any adjustment in contract price made pursuant to this clause shall be determined in accordance with the price adjustment clause of this CONTRACT.

69. Differing Site Conditions:

A. Notice. The CONTRACTOR shall promptly, and before such conditions are disturbed, notify the OWNER, in writing, concerning any:

(1) Subsurface or latent physical conditions at the site differing materially from those indicated in this CONTRACT; or

(2) Unknown physical conditions at the site of an unusual nature, differing materially from those ordinarily encountered and generally recognized as inherent in WORK of the character provided for in this CONTRACT.

B. Adjustments of Price or Time for Performance. After receipt of such notice, the OWNER shall promptly investigate the site, and if it is found that such conditions do materially so differ and cause an increase in the CONTRACTOR's cost of, or the time required for, performance of any part of the WORK under this contract, whether or not changed as a result of such conditions, an equitable adjustment shall be made and the CONTRACT modified in writing accordingly. Any adjustment in CONTRACT price made pursuant to this clause shall be determined in accordance with the Price Adjustment Clause of this CONTRACT.

C. Time Period for Notice of Claims. Any claim by the CONTRACTOR for an adjustment under this clause must be asserted by the CONTRACTOR, in writing, within thirty (30) days from the date of the CONTRACTOR's notice to the OWNER concerning the differing site conditions; provided that the OWNER may, in his/her sole discretion, receive and act upon any such claim asserted at any time prior to issuance of notice of substantial completion.

D. No claim shall be allowed unless the CONTRACTOR has given the notice required in Subparagraph (A) of this clause; provided that the time prescribed therefor may be extended by the OWNER.

E. Knowledge. Nothing contained in this clause shall be grounds for an adjustment in compensation if the CONTRACTOR had actual knowledge of the existence of such conditions prior to the submission of bids.

70. Price Adjustment:

A. Price Adjustment Methods. Any adjustment in BID PRICE pursuant to any clause in this CONTRACT shall be made in one or more of the following ways:

(1) By agreement on a fixed-price adjustment before commencement of the pertinent performance;

(2) By unit prices specified in this CONTRACT;

(3) By the costs attributable to the applicable events or situations, plus appropriate profit or

fee, in the following manner:

(a) The CONTRACTOR shall furnish to the OWNER a detailed estimate of the actual cost of labor, materials, taxes and equipment required for the performance of such WORK. Equipment rental rates shall not exceed those of comparable rates charged by rental companies or as agreed to by the OWNER and CONTRACTOR prior to start of the project.

(b) For added or omitted work by a Subcontractor (not including unit price) the CONTRACTOR shall furnish to the OWNER a detailed estimate of the actual cost of the Subcontractors for labor, materials, taxes and equipment to be used for such WORK. Each such estimate shall be signed by the Subcontractor as his/her estimate of the costs thereto.

(c) The CONTRACTOR and Subcontractor agree that a fixed fee not exceeding 15% of the increased costs shall be full compensation to cover all costs of supervision, overhead, bond, and any other direct or indirect overhead expenses and profit.

(4) In such manner as the parties may mutually agree; or

(5) In the absence of agreement between the parties, by a unilateral determination by the OWNER of the costs attributable to the applicable event or situation, plus appropriate profit or fee, all as computed by the OWNER, subject to the CONTRACTOR's legal and contractual remedies.

B. Submission of Cost or Pricing Data. The CONTRACTOR shall submit certified cost or pricing data for any price adjustments, except where they are based upon established catalog prices or market prices, or upon adequate price competition or are set by law or regulation. Any price adjustments allowable hereunder shall exclude sums found by the OWNER to have resulted from any cost or pricing data furnished by the CONTRACTOR which were inaccurate, incomplete or not current as of the date of their submission to the OWNER.

71. Termination for Convenience of the Owner:

A. The performance of WORK under this contract may be terminated by the OWNER in accordance with this clause in whole, or from time to time, in part, whenever the OWNER shall determine that such termination is in the best interest of the OWNER or any person for whom the OWNER is acting under this CONTRACT. Any such termination shall be effected by delivery to the CONTRACTOR of a notice of termination specifying the extent to which performance of WORK under the contract is terminated, and the date upon which such termination becomes effective.

No termination may be effected unless the CONTRACTOR is given (1) not less than ten calendar days written notice (delivered by certified mail, return receipt requested), and (2) an opportunity for consultation with the OWNER prior to termination.

B. After receipt of a notice of termination, and except as otherwise directed by the OWNER, the CONTRACTOR shall:

(1) Stop WORK under the CONTRACT on the date and to the extent specified in the notice of termination;

(2) Place no further orders or subcontracts for materials, services or facilities, except as may be necessary for completion of such portion of the WORK under the CONTRACT as is not terminated;

(3) Terminate all orders and subcontracts to the extent that they relate to performance of WORK terminated by the notice of termination;

(4) Assign to the OWNER in the manner, at the times, and to the extent directed by the OWNER, all of the right, title, and interest of the CONTRACTOR under the orders and subcontracts so terminated, in which case the OWNER shall have the right, in his/her discretion, to settle or pay any or all claims arising out of the termination of such orders and subcontracts;

(5) Settle all outstanding liabilities and all claims arising out of such termination of orders and subcontracts, with the approval or ratification of the OWNER, which approval or ratification shall be final for all the purposes of this clause:

(6) Transfer title and deliver to the OWNER in the manner, at the times, and to the extent, if any, directed by the OWNER:

(a) The fabricated or unfabricated parts, WORK in process, completed WORK, supplies, and other material produced as a part of, or acquired in connection with the performance of the WORK terminated by the notice of termination; and

(b) The completed or partially completed plans, drawings, information, and other property which, if the CONTRACT had been completed, would have been required to be furnished to the OWNER;

(7) Use his/her best efforts to sell, in the manner, at the times, to the extent, and at the price or prices directed or authorized by the OWNER, any property of the types referred to in (6) above; provided, however, that the CONTRACTOR:

(a) Shall not be required to extend credit to any purchaser; and

(b) May acquire any such property under the conditions prescribed by and at a price or prices approved by the OWNER; and provided further that the proceeds of any such transfer of disposition shall be applied in reduction of any payments to be made by the OWNER to the CONTRACTOR under this CONTRACT or shall otherwise be credited to the price or cost of the work covered by this CONTRACT or paid in such other manner as the OWNER may direct;

(8) Complete performance of such part of the WORK as shall not have been terminated by the notice of termination; and

(9) Take such action as may be necessary, or as the OWNER may direct, for the protection and preservation of the property related to this contract which is in the possession of the CONTRACTOR in which the OWNER has or may acquire an interest.

C. After receipt of a notice of termination, the CONTRACTOR shall submit to the OWNER his/her termination claim, in the form and with certification prescribed by the OWNER. Such claim shall be submitted promptly but in no event not later than sixty (60) days from the effective date of termination, unless one or more extensions in writing are granted by the OWNER, upon request of the CONTRACTOR made in writing within such period or authorized extension thereof. However, if the OWNER determines that the facts justify such action, he/she may receive and act upon any such termination claim at any time after such sixty (60) day period or any extension thereof. Upon failure of the CONTRACTOR to submit his/her termination claim within the time allowed, the OWNER may determine, on the basis of information available to him/her, the amount, if any, due to the CONTRACTOR by reason of the termination and shall thereupon pay to the CONTRACTOR the amount so determined.

D. Subject to the provisions of Paragraph (C), the CONTRACTOR and the OWNER may agree upon the whole or any part of the amount or amounts to be paid to the CONTRACTOR by reason of the total or partial termination of WORK pursuant to this clause, which amount or amounts may include a reasonable allowance for profit on WORK done; provided that such agreed amount or amounts, exclusive of settlement costs, shall not exceed the total contract price as reduced by the amount of payments otherwise made and as further reduced by the CONTRACT price of work not terminated. The CONTRACT shall be amended accordingly, and the CONTRACTOR shall be paid the agreed amount. Nothing in Paragraph (E) of this clause, prescribing the amount to be paid to the CONTRACTOR in the event of failure of the CONTRACTOR and the OWNER to agree upon the whole amount to be paid to the CONTRACTOR by reason of the termination of work pursuant to this clause, shall be deemed to limit, restrict, or otherwise determine or affect the amount or amounts which may be agreed upon to be paid to the CONTRACTOR pursuant to this Paragraph (D).

E. In the event of the failure of the CONTRACTOR and the OWNER to agree, as provided in Paragraph (D), upon the whole amount to be paid to the CONTRACTOR by reason of the termination of WORK pursuant to this clause, the OWNER shall pay to the CONTRACTOR the amounts determined by the OWNER as follows, but without duplication of any amounts agreed upon in accordance with Paragraph (D):

(1) With respect to all CONTRACT WORK performed prior to effective date of the notice of termination, the total (without duplication of any items) of:

(a) The cost of such WORK;

(b) The cost of settling and paying claims arising out of the termination of WORK under subcontracts or orders as provided in Paragraph (B)(5) above, exclusive of the amounts paid or payable on account of supplies or materials delivered or services furnished by the Subcontractor prior to the effective date of the notice of termination under this CONTRACT, which amounts shall be included in the cost on account of which payment is made under (a) above; and

(c) A sum, as profit on (a) above, determined by the OWNER to be fair and reasonable; provided, however, that if it appears that the CONTRACTOR would have sustained a loss on the entire CONTRACT had it been completed, no profit shall be included or allowed under this subdivision (c) and an appropriate adjustment shall be made reducing the amount of the settlement to reflect the indicated rate of loss; and

(2) The reasonable cost of the preservation and protection of property incurred pursuant to Paragraph (B)(9); and any other reasonable cost incidental to termination of WORK under this CONTRACT, including expense incidental to the determination of the amount due to the CONTRACTOR as the result of the termination of WORK under this CONTRACT.

The total sum to be paid to the CONTRACTOR under (E)(1) above shall not exceed the total CONTRACT price as reduced by the amount of payments otherwise made and as further reduced by the CONTRACT price of WORK not terminated. Except for normal spoilage, and except to the extent that the OWNER shall have otherwise expressly assumed the risk of loss, there shall be excluded from the amounts payable to the CONTRACTOR under (E)(1) above, the fair value, as determined by the OWNER of property which is destroyed, lost, stolen, or damaged so as to become

undeliverable to the OWNER, or to a buyer pursuant to Paragraph (B)(7).

F. In arriving at the amount due the CONTRACTOR under this clause, there shall be deducted:

(1) All unliquidated advance or other payments on account theretofore made to the CONTRACTOR, applicable to the terminated portion of this CONTRACT;

(2) Any claim which the OWNER may have against the CONTRACTOR in connection with this CONTRACT; and

(3) The agreed price for, or the proceeds of sale of, any materials, supplies, or other things acquired by the CONTRACTOR or sold, pursuant to the provisions of this clause, and not otherwise recovered by or credited to the OWNER.

G. If the termination hereunder be partial, the CONTRACTOR may file with the OWNER a claim for an equitable adjustment of the price or prices specified in the CONTRACT relating to the continued portion of the CONTRACT (the portion not terminated by the notice of termination), and such equitable adjustment as may be agreed upon shall be made in such price or prices. Any claim by the CONTRACTOR for an equitable adjustment under this clause must be asserted within sixty (60) days from the effective date of the notice of termination, unless an extension is granted in writing by the OWNER.

H. The OWNER may, from time to time, under such terms and conditions as he may prescribe, make partial payments and payments on account against costs incurred by the CONTRACTOR in connection with the terminated portion of this CONTRACT whenever, in the opinion of the OWNER the aggregate of such payments shall be within the amount to which the CONTRACTOR will be entitled hereunder. If the total of such payments is in excess of the amount finally agreed or determined to be due under this clause, such excess shall be payable by the CONTRACTOR to the OWNER upon demand, together with interest at a rate equal to the average rate at the time being received from the investment of state funds, as determined by the State Treasurer, for the period from the date such excess is repaid to the OWNER; provided, however, that no interest shall be charged with respect to any such excess payment attributable to a reduction in the CONTRACTOR's claim by reason of retention or other disposition of termination inventory until ten (10) days after the date of such retention or disposition, or such later date as determined by the OWNER by reason of the circumstances.

I. Unless otherwise provided for in this contract, or by applicable statute, the CONTRACTOR shall - from the effective date of termination until the expiration of three years after final settlement under this CONTRACT - preserve and make available to the OWNER at all reasonable times at the office of the CONTRACTOR, but without direct charge to the OWNER, all books, records, documents and other evidence bearing on the costs and expenses of the CONTRACTOR under this CONTRACT and relating to the work terminated hereunder, or, to the extent approved by the contracting officer, photographs, micrographs, or other authentic reproductions thereof.

72. Liquidated Damages:

The CONTRACTOR is referred to Attachment C, Article 12 of the contract for conditions of liquidated damages.

73. Termination for Breach, Etc.:

If the CONTRACTOR shall be adjudged bankrupt, or if CONTRACTOR should make a general assignment for the benefit of his/her creditors, or if a receiver should be appointed on account of CONTRACTOR's insolvency, or if CONTRACTOR or any of his/her Subcontractors should violate any of the provisions of this CONTRACT, the OWNER may serve written notice upon CONTRACTOR of its intention to terminate said CONTRACT; and unless within ten (10) days after the serving of such notice, such violation shall cease, the OWNER then may take over the WORK and prosecute same to completion by CONTRACT or by any other method it may deem advisable for the amount and at the expense of the CONTRACTOR. The CONTRACTOR shall be liable to the OWNER for any excess cost occasioned the OWNER thereby and in such event, the OWNER may, without liability for so doing, take possession of and utilize in completing the WORK, such materials, appliances, paint, and any other property belonging to the CONTRACTOR as may be on the site of the work and necessary therefor.

74. Normal Daylight Hours:

Contractor shall perform WORK on the premises during normal daylight hours and shall not perform WORK on the site when artificial light would be required to safely perform the WORK.

75. Normal Working Days:

CONTRACTOR shall perform the WORK during normal working days and shall not work during Sundays, or recognized national and state holidays. CONTRACTOR may take the option of working on Saturdays if the WORK is scheduled regularly to be performed on Saturdays and is approved by OWNER.

76. Use of Explosives

The storage, possession or use of explosives on the site shall be strictly prohibited unless expressly authorized by the OWNER and approved by the State.

77. Compliance with Copeland Regulations

The CONTRACTOR shall comply with the Copeland Regulations of the Secretary of Labor (29 CFR Part 3) which are incorporated herein by reference.

78. Overtime Compensation

A. The CONTRACTOR or Subcontractor shall not require or permit any laborer or mechanic in any

workweek in which he or she is employed under this CONTRACT to work in excess of forty hours in such workweek unless such laborer or mechanic receives compensation at a rate not less than one and one-half times the basic rate of pay for all hours worked in excess of forty hours in such workweek, whichever is the greater number of overtime hours.

B. In the event of any violation of the provisions of paragraph (a), the CONTRACTOR or Subcontractor shall be liable to any affected employee for any amounts due, and to the State of Utah for liquidated damages. Such liquidated damages shall be computed with respect to each individual laborer or mechanic, including watchmen and guards, employed in violation of the provisions of paragraph (a) in the sum of $10 for each calendar day on which such employee was required or permitted to work in excess of the standard forty hour workweek without payment of the overtime wages required by paragraph (a).

79. Clean Air and Water

The CONTRACTOR shall use best efforts to comply with all requirements and applicable regulations, standards, and implementation plans under the Clean Air Act (42 USC 7401 et seq.) and the Clean Water Act (33 USC 1251 et seq.). No part of the WORK shall be performed in a facility listed on the U.S. Environmental Protection Agency List of Violating Facilities during the term of the CONTRACT. CONTRACTOR further agrees to insert the substance of this clause in any Subcontract.

Clean air and water standards include any enforceable rules, regulations, guidelines, orders, or other requirements issued under the Clean Air Act, Clean Water Act, or Executive Order 11738; applicable approved implementation plans described in Sections 110(d), 111(c&d), or 112(d) of the Clean Air Act; and requirements contained in permits issued by the U.S. Environmental Protection Agency or state or local governments authorized by Sections 402 or 307 of the Clean Water Act. "Facility," as used here, means any building, plant, structure, mine, location, or site of operations owned, leased, or supervised by the CONTRACTOR or Subcontractor in the performance of the CONTRACT.

[Last Revised November 5, 2002.]

Supplemental General Conditions

1. Statement Clarification of Terms:

   The Division of Oil, Gas & Mining will assume responsibility for design and engineering on this project and will provide inspection. See Articles 36, 37, and 38.

2. Plan Checks:

   Checks shall be made out to the Utah Division of Oil, Gas & Mining.

3. Equal Opportunity:

   The CONTRACTOR agrees to abide by the provisions of Titles VI and VII of the Civil Rights Act of 1964 (42 USC 2000e) which prohibits discrimination against any employee or applicant for employment or any applicant or recipient of services on the basis of race, religion, color, or national origin. CONTRACTOR further agrees to abide by the following directives: Executive Order No. 11246, as amended, which prohibits discrimination on the basis of sex; federal regulation 45 CFR 90, which prohibits discrimination on the basis of age; Section 504 of the Rehabilitation Act of 1973 (29 USC 701 et seq), which prohibits discrimination on the basis of handicap; and Utah's Executive Order, dated June 30, 1989, which prohibits sexual harassment in the workplace.

4. Access to Records:

   The CONTRACTOR agrees to provide the OWNER, the U.S. Office of Surface Mining, The Comptroller General of the United States, or any of their duly authorized representatives access to any books, documents, papers, and records which are directly pertinent to this CONTRACT for the purpose of making audit, examination, excerpts, and transcriptions. Such access will be made during normal business hours, or by appointment.

5. Retention of Records:

   The CONTRACTOR agrees to retain and preserve any books, documents, papers, and records which are directly pertinent to this CONTRACT for a period of four years from the date of final payment for the WORK or from the date of Final Acceptance, whichever is later.

6. Variation in Estimated Quantities:

   Variations Requiring Adjustments. Where the quantity of any item within the scope of this CONTRACT is an estimated quantity and where the actual quantity of such item varies by more than 15% above or below the estimated quantity stated in this CONTRACT, an adjustment in the CONTRACT price shall be made upon demand of either party. The adjustment shall be based upon any increase or decrease in costs due solely to variation above 115% or below 85% of the estimated quantity. If the quantity variation is such as to cause an increase in the time necessary for completion, the OWNER, upon receipt of a written request for an extension of time, prior to the date of final settlement of the CONTRACT, shall ascertain the facts and make adjustment for extending the completion date as in the judgment of the OWNER such facts justify.

7. Authority:

Provisions of this contract are pursuant to the authority set forth in Sections 63-56 UCA 1953 as amended, the Utah State Procurement Rules (*Utah Administrative Code*, Section R33), and related statutes which permit the OWNER to purchase certain specified services and other approved purchases for the State.

8. Conflict of Interest:

CONTRACTOR represents that none of its officers or employees are officers or employees of the State of Utah, unless disclosure has been made in accordance with Section 67-16-8, UCA 1953, as amended.

9. Separability Clause:

The declaration by any court or any other binding legal source that any provision of this contract is illegal and void shall not affect the legality and enforceability of any other provision of this contract unless the provisions are mutually dependent.

10. Debarment:

The CONTRACTOR certifies that neither it nor its principals are presently debarred, suspended, proposed for debarment, declared ineligible, or voluntarily excluded from participation in this contract by any governmental department or agency.

[Last Revised April 2, 1993.]

WHITE OAK MINE PROJECT

TECHNICAL SPECIFICATIONS

SECTION 0200	GENERAL SITE INFORMATION
SECTION 0220	MOBILIZATION/DEMOBILIZATION
SECTION 0230	ACCESS IMPROVEMENT
SECTION 0240	DEMOLITION AND CLEAN-UP
SECTION 0250	MINE CLOSURES
SECTION 0251	CAST-IN-PLACE CONCRETE
SECTION 0252	CONCRETE REINFORCEMENT
SECTION 0253	BAT GATE & SHAFT GRATE INSTALLATION
SECTION 0254	POLYURETHANE FOAM SHAFT CLOSURES
SECTION 0270	SITE GRADING/EARTHWORK
SECTION 0280	DRAINAGE CONTROL
SECTION 0290	REVEGETATION
SECTION 0300	SPECIFIC SITE REQUIREMENTS

0200 General Site Information

PART 1 - GENERAL

1.01 WORK INCLUDED

The WORK consists of reclamation of abandoned mine features as described in Section 0300. The General Technical Specifications, Sections 0200 through 0290, outline WORK broadly applicable to all abandoned mine reclamation situations and that may not be required at each mine site in this project. Section 0300 provides the site-specific detail. Where there is a conflict between Section 0300 and the General Technical Specifications (0200's), Section 0300 shall govern.

1.02 SUBMITTALS

A. Submittals requested in the Technical Specifications to be submitted *with the Bid Proposal* shall be included in and submitted with the sealed bid proposal delivered to the Division of Purchasing.

B. Submittals requested in the Technical Specifications to be submitted *after award of the CONTRACT or during construction* shall be delivered to the designated representative for the Division of Oil, Gas and Mining (DOGM), referred to in these Specifications as the OWNER.

CONTRACTOR shall submit within five (5) days after award of the CONTRACT a calendar of WORK for performing the WORK, including routine workdays and hours, anticipated holidays, and days that the project will remain idle. Schedule shall also indicate WORK schedules for subcontractors and their estimated start and completion days. Allowance in the schedule shall be made for routine delays due to weather or other site conditions as they occur. The OWNER shall approve said schedule. Any significant deviation from that schedule shall be submitted in writing to the OWNER in the form of an updated schedule as the WORK progresses.

1.03 RELATED WORK

A. Section 0220: Mobilization/Demobilization
B. Section 0230: Access Improvement
C. Section 0240: Demolition and Cleanup
D. Section 0250: Mine Closures
E. Section 0251: Cast-in-Place Concrete
F. Section 0252: Concrete Reinforcement
G. Section 0253: Bat Gate & Shaft Grate Installation
H. Section 0254: Polyurethane Foam Mine Closures
I. Section 0270: Site Grading/Earthwork
J. Section 0280: Drainage Control & Stream Protection
K. Section 0290: Revegetation
L. Section 0300: Specific Site Requirements

1.04 CONDITIONS AND RESTRICTIONS

A. The project area and vicinity may contain several abandoned mine and/or town sites, but WORK will be limited to items specifically identified in Section 0300: Specific Site Requirements.

B. *The pre-bid meeting is optional.* However, due to the nature of the WORK at these sites, the CONTRACTOR is strongly encouraged to participate in the entire prebid site tour and meeting in order to submit a responsible bid. The CONTRACTOR shall acknowledge in the bid that the site conditions have been examined and that the measurements and evaluations necessary to plan and bid the WORK have been made.

C. Due to the hazards associated with abandoned mines, all WORK on mine portals shall be

conducted under the supervision of a qualified person with current certification to do such WORK under the General Safety Orders of Utah Coal Mines (i.e. Mine Foreman and/or Fire Boss). This person is referred to as the "Certified Person" in these specifications hereafter. No smoking or open flames shall be permitted within fifty feet of any mine opening. Welding in or near a mine opening is permitted with the approval of the Certified Person. No person shall be permitted to enter a mine opening unless the atmosphere of the opening is tested, the roof is adequately supported and tested, and only at the direction of the Certified Person.

D. CONTRACTOR shall identify and develop rapid communication procedures with the closest available emergency medical response units and medical centers. All workers, foremen, superintendents, and managers shall be indoctrinated to emergency response procedures.

E. CONTRACTOR shall be aware that underlying mine workings exist in the areas to be disturbed by the CONTRACTOR. The location, extent, and condition of the underground workings at each mine site are not well known. These workings or voids where workings have caved may be encountered unexpectedly during the course of the WORK and present a hazard to equipment operators and other workers at the site. The CONTRACTOR shall take every precaution to protect the safety of the workers during WORK on the project. Any voids or openings excavated or discovered shall be brought to the immediate attention of the OWNER.

F. The WORK shall stop and the OWNER shall be notified immediately if an accident occurs or upon discovery of a hazard that threatens the safety of workers or the public. The OWNER shall be notified immediately of any situation that may cause environmental damage.

G. CONTRACTOR shall provide, erect, and maintain temporary barriers, signs, and security devices as necessary to ensure the safety of the CONTRACTOR's personnel, the OWNER's personnel, and the general public.

H. WORK shall occur normally during daylight hours and shall not be performed when darkness or other conditions required the use of artificial light to safely perform the WORK, without the prior written approval of the OWNER.

I. WORK shall be performed during weekdays and shall not be performed during weekends or legal State and Federal holidays without the prior written approval of the OWNER. A schedule of holidays is available from the OWNER.

J. WORK shall be conducted with minimum interference to public or private thoroughfares. Egress and access shall be maintained at all times.

K. Roadways shall not be closed or obstructed without permits. The CONTRACTOR will close and lock gates at the landowner's request.

L. All trucks transporting materials and debris shall be covered with tarps or other suitable coverings if necessary to eliminate loss of debris during transportation to off-site disposal areas.

M. CONTRACTOR shall provide water and an adequate water supply system for dust suppression where dust will cause a public nuisance or as directed by OWNER. The CONTRACTOR will pay the cost of water and dust suppression.

N. No materials shall be placed in or be situated such that they may enter any stream, tributary, or drainage channel.

O. Relics, antiques, artifacts and similar objects as identified by the OWNER remain the property of

the OWNER. CONTRACTOR shall notify the OWNER upon discovery of cultural features and obtain direction from OWNER regarding handling of features that interfere with performing the WORK. Relics and antiques include, but are not limited to:

1. Cornerstone and contents
2. Commemorative plaques
3. Archaeological relics or finds
4. Historical relics

P. CONTRACTOR shall remove and promptly dispose of any contaminated, vermin infested, or dangerous materials encountered. Transformers, oil-filled electrical equipment, or other toxic materials shall be called immediately to the attention of the OWNER. Disposal of such items shall be the responsibility of the CONTRACTOR and at the direction of the OWNER in accordance with EPA and State Health requirements.

Q. CONTRACTOR shall remove from site all debris created during construction.

R. Materials shall not be burned on site without appropriate permits and the approval of the OWNER.

S. Blasting shall be permitted only with prior written approval of the OWNER and following submission by the CONTRACTOR of a blasting plan.

T. Existing utilities, benchmarks, trees, vegetation, and landscaping materials which are not to be demolished, relocated, or otherwise disturbed shall be protected.

U. Wildlife of any kind (except Norway rats) encountered during the WORK shall be left unharmed or, if captured, released unharmed offsite. Snakes, including rattlesnakes, shall not be harmed. Any wildlife inadvertently killed by the CONTRACTOR will be turned over to the OWNER to be disposed of under the Certificate of Registration (COR Number 6COLL5414) issued to the OWNER by the Utah DWR. CONTRACTOR shall immediately notify OWNER of any bats found in mine openings.

V. CONTRACTOR shall be compensate employees at a rate of no less than 1.5 times the base rate of pay for work beyond 40 hours in one week.

W. CONTRACTOR shall submit to OWNER each week daily logs indicating the following: 1) weather conditions, 2) crew size, 3) hours worked, 4) equipment used, 5) work completed, 6) WORK approved, 7) delays, 8) equipment downtime, 9) injuries, 10) visitors, 11) access problems, etc. OWNER has provided a form for these logs in Appendix C.

X. Should onset of adverse winter or extreme summer weather conditions force construction to stop prior to completion of the WORK, the sites shall be left in a condition that minimizes safety hazards and risk of erosion. Temporary erosion control structures may be required. Revegetation may be postponed to the fall if necessary.

Y. Depending upon the bid submittals and the overall CONTRACTOR selection process, CONTRACTOR WORK may precede, follow, or occur during work by other CONTRACTORS at the same site and/or other sites in the Project Area.

Z. CONTRACTOR shall select from a pre-determined number of staging areas identified in the specifications and secure all necessary permits, including camping permits, from the applicable land management agency.

1.05 QUALITY ASSURANCE

A. CONTRACTOR shall use only quality materials in performing the WORK.

B. Quality of the WORK performed by the CONTRACTOR shall be subject to approval by the OWNER. CONTRACTOR shall assure that the WORK has been performed to the specifications and standards as described herein. The OWNER shall inspect and accept or reject the WORK as the WORK progresses. Payment shall be made only for WORK accepted and approved by the OWNER. CONTRACTOR shall warrant the WORK for a period of one year following final acceptance except that such material warranties and guarantees from manufacturers and suppliers that may be longer than one year shall carry for their term.

PART 2 - PRODUCTS

2.01 GENERAL

Products and materials used in the WORK shall be as required in these Specifications.

2.02 DELIVERY, STORAGE AND HANDLING

A. CONTRACTOR shall be responsible for the delivery, storage and handling of all items and materials used in performing the WORK.

B. CONTRACTOR shall be responsible for all materials used in conjunction with the WORK until said WORK is accepted and approved by the OWNER and shall warrant all materials as required by Part 1.05, Quality Assurance.

PART 3 - EXECUTION

PREPARATION

A. Upon receipt of notice to proceed, the CONTRACTOR shall perform the WORK as required by these Specifications and Construction Drawings.

B. CONTRACTOR shall obtain and provide proof of all licenses, permits, bonds, insurance and other such items as may be required by these Specifications and local, regional, State and Federal jurisdictions prior to execution of the WORK. CONTRACTOR shall select from a pre-determined set of staging areas identified in the specifications and secure all necessary permits, including camping permits, from the applicable land management agency.

C. Upon receipt by the CONTRACTOR of the NOTICE TO PROCEED, the CONTRACTOR shall notify the OWNER of the starting date and execution of the WORK shall commence in accordance with the General Specifications as included with the Agreement and the Technical Specifications as presented herein. CONTRACTOR shall provide the OWNER with a schedule for the proposed WORK in calendar, bar chart, or critical path schedule form.

PART 4 - FORM OF AGREEMENT

4.01 CONTRACT AGREEMENT

The CONTRACT agreement will be in the form of that included in the bid package. This agreement may be administered as a Division of Purchasing Purchase Order. If administered as a purchase

order, the purchase order will reference the bid package, and all the terms and conditions of the solicitation, including the contract form, general and supplementary conditions, technical specifications, and addenda will apply to the agreement.

4.02 CHANGES TO THE AGREEMENT

A. When these services are procured by an agency contract, OWNER shall require amendments to the Agreement to be in the form of a change order, signed by both parties. When these services are procured by a Division of Purchasing Purchase Order, amendments shall be on Form DP-28 "Request for Purchase Order Cancellation or Change."

B. Change orders or Form DP-28's shall become attached to and part of the Agreement under the terms of the Agreement with changes as stipulated on the change order or Form DP-28. Change orders or Form DP-28's shall not release the CONTRACTOR from any other terms or conditions that apply and are a part of the Agreement.

C. Any additional WORK must be authorized by the OWNER and must be in the form of a contract change order or Form DP-28 as an amendment to the Agreement. The change order or Form DP-28 must be fully executed prior to the CONTRACTOR undertaking any additional WORK.

PART 5 - MEASUREMENT, PAYMENT, AND WORK INCLUDED

5.01 GENERAL

A. The WORK included and measurement of and payment for that WORK shall be as described within each Section of the Technical Specifications and Supplementary Condition #6.

B. Total contract amount, including any change orders, shall constitute full compensation for the WORK.

C. Payments shall only be made for those items shown on the Bid Schedule. All other costs or incidentals shall be reflected in the Bid Schedule or shall be paid at the CONTRACTOR's expense.

5.02 RETAINAGE

Unless stated otherwise in the specific section of the Specifications, all final bid item payments shall have ten percent withheld as retainage until successful completion of the CONTRACT. The retainage shall be made from each progress payment, and be released upon written Final Acceptance by the OWNER.

5.03 PENALTIES

A. The OWNER reserves the right to levy a penalty payment for areas unnecessarily disturbed during the WORK. These areas include any archeological sites, paleontological sites, or undisturbed upland vegetation areas.

B. The penalty for unnecessary disturbance to archeological sites, paleontological, or upland vegetation areas will be based on the per acre disturbance at the CONTRACTOR’s bid amount for revegetation of adjacent sites.

END OF SECTION 0200

0220 Mobilization/Demobilization

PART 1 - GENERAL

WORK INCLUDED

The item for payment for mobilization/demobilization is intended to compensate the CONTRACTOR for operations including, but not limited to, those necessary for the movement of personnel, equipment, supplies, and incidentals to and from the project area, movement between the various mine sites included within the project area, and for all other WORK and operations which must be performed or costs incurred prior to the initiation of meaningful work at the site.

PART 2 - PRODUCTS

2.01 DRINKING WATER AND SANITARY FACILITIES

CONTRACTOR shall provide and maintain safe drinking water and sanitary facilities for all employees, all subcontractors' employees, and the OWNER. Drinking water and sanitary facilities shall comply with all regulations of the local and state departments of health and be approved by the OWNER.

2.02 COMMUNICATIONS

CONTRACTOR shall provide OWNER's onsite inspector or representative with an onsite communication system for the OWNER's exclusive use for the full duration of the project construction. The communication system shall be a cellular telephone and cellular service, or equivalent. Cell phones shall have sufficient power to allow clear transmissions from a majority of the project area. Any necessary accessories, such as antennas, batteries, battery charger, cigarette lighter adapter, and operating manuals, shall be provided. This item is not a separate bid or pay item; all telephone costs are subsidiary to and should be included in the overall cost for Mobilization/Demobilization.

PART 3 - EXECUTION

3.01 PREPARATION

A. Preparation of the WORK shall include obtaining all permits and other such incidentals as necessary to execute the WORK. CONTRACTOR shall select from a pre-determined set of staging areas identified in the specifications and secure all necessary permits, including camping permits, from the applicable land management agency.

B. Permits shall be posted or readily available prior to start of construction activities as required by municipal, State, or Federal regulations.

3.02 EXECUTION

Upon receipt by the CONTRACTOR of due NOTICE TO PROCEED, the CONTRACTOR shall notify the OWNER of the starting date and execution of the WORK shall commence in accordance with the General Specifications as included with the Agreement and the Technical Specifications as presented herein. CONTRACTOR shall provide the OWNER with a schedule for the proposed WORK in calendar, bar chart, or critical path schedule form.

PART 4 - MEASUREMENT AND PAYMENT

4.01 BASIS FOR PAYMENT

No partial payments will be made for multiple equipment moves or for moving between sites. Only the following partial payment shall be made of the total lump sum for mobilization/demobilization. Payment of sixty percent (60%) of total lump sum for mobilization will be made when 10 percent of the overall BID PRICE has been earned from other bid items. Payment of the remaining forty percent (40%) of the total lump sum for demobilization will be made after issuance of the Certificate of Substantial Completion at the completion of CONTRACT. Payments for mobilization/demobilization are not subject to withholding of retainage. The BID PRICE for mobilization/demobilization will also include those incidental costs as required by the CONTRACTOR in order to commence the WORK such as permits, insurance, and other such items as may be required to perform the WORK.

4.02 MEASUREMENT

Measurement will be based on the amount of the WORK performed and accepted and approved by the OWNER. When 10 percent of the WORK has been earned, the CONTRACTOR may submit on the invoice sixty percent (60%) of the BID PRICE for mobilization/demobilization as set forth above. On completion of the CONTRACT and issuance of the Certificate of Substantial Completion, the CONTRACTOR may claim the remaining forty percent (40%) of the BID PRICE for mobilization/demobilization.

4.03 PAYMENT

The BID PRICE for mobilization/demobilization will be paid once only and will include complete mobilization, demobilization, and moves between sites regardless of the number of times equipment is moved or additional equipment is transported to or from the construction site. The BID PRICE will also include those incidental costs as required by the CONTRACTOR in order to commence with the WORK such as permits, insurance, and other such items as may be required to perform the WORK.

END OF SECTION 0220

0230 Access Improvements

PART 1 - GENERAL

1.01 WORK INCLUDED

This item for payment is to develop and maintain site access or improve existing site access. Improvement is limited to the extent required to complete WORK at each mine site. It is not the intent of this WORK to construct roads. The WORK shall include temporary site access to reach sites of construction, and maintenance of existing permanent roads that must be used for movement of equipment, materials and labor. CONTRACTOR shall minimize disturbance resulting from site access improvements. In areas in which a passable road did not previously exist, the CONTRACTOR shall reclaim the access improvement in accordance with this Section upon completion of the WORK. Existing, permanent roads shall be left in a condition at a minimum as good as that prior to the WORK.

1.02 SUBMITTALS

The CONTRACTOR shall submit *with the Bid Proposal* a description of access improvements to be performed at each site and shall not deviate from this plan without the written approval of the OWNER. For sites not easily accessible, the CONTRACTOR may choose to gain equipment access, do hand work, or access with a helicopter.

1.03 RELATED WORK

A. Section 0240: Demolition and Clean-up
B. Section 0250: Mine Closures
C. Section 0253: Bat Gate & Shaft Grate Installation
D. Section 0254: Polyurethane Foam Mine Closures
E. Section 0270: Site Grading/Earthwork
F. Section 0280: Drainage Control & Stream Protection
G. Section 0300: Specific Site Requirements

PART 2 - PRODUCTS

MATERIALS

2.01 CONTRACTOR may utilize local resistant materials or import road base materials to maintain access and minimize damage to the environment. If wet weather conditions prevail, OWNER may require CONTRACTOR to stockpile road base material at work sites in order to maintain the schedule.

2.02 CONTRACTOR may choose to temporarily place corrugated steel pipe or other conveyance structures in the access improvement. The CONTRACTOR shall comply with Section 0280: Drainage Control and Stream Protection unless otherwise directed by the OWNER.

PART 3 - EXECUTION

GENERAL

3.01 The location, alignment and grade of any temporary access improvement shall be in accordance with Section 0300: Specific Site Requirements, subject to Section 0280: Drainage Control and Stream Protection, and subject to the approval of the OWNER.

3.02 Temporary access improvements shall be constructed so as to minimize disturbance to existing vegetation, and to minimize potential erosion.

3.03 Where temporary site access crosses perennial or intermittent streams, the CONTRACTOR shall maintain the drainage by providing a temporary crossing in accordance with Section 0280: Drainage Control and Stream Protection, and subject to the OWNER'S approval. Upon completion of the WORK, CONTRACTOR shall restore drainages to approximate original condition, subject to the acceptance and approval of the OWNER.

3.04 When no longer required by the CONTRACTOR, temporary access improvements will be reclaimed in the following manner. Existing passable access shall be left in or returned to approximate original condition. Access previously impassable or newly created access shall be restored to blend with surrounding contours and reclaimed for erosion control as shown on the Drawings. The surfaces of such access shall be scarified and revegetated in accordance with Section 0290: Revegetation.

PART 4 - MEASUREMENT AND PAYMENT

4.01 MEASUREMENT

Measurement shall be per mine site as access improvement WORK is completed, accepted and approved by the OWNER. Measurement shall be consistent with the BID PRICE. The OWNER's approval of mine site access development will be authorization for payment of 50 percent of the pay item which will also include consideration for maintenance of temporary access to the site throughout the WORK. The OWNER's acceptance of all WORK completed and approval of the temporary site access reclamation for the site will be authorization for payment of the balance of this pay item.

4.02 PAYMENT

Payment for maintenance of existing paved and gravel-surfaced roads will be consistent with the BID PRICE for this item. Payment of 50 percent of the BID PRICE will be made upon receipt of the invoice submitted by CONTRACTOR. The balance of 50 percent of the BID PRICE may be invoiced and paid after approval of the site WORK and approval of site access reclamation. Payment of this item is subject to withholding of the retainage.

END OF SECTION 0230

0240 Demolition And Clean-Up

PART 1 - GENERAL

1.01 WORK INCLUDED

The WORK consists of the demolition and clean-up of designated structures and areas including, but not limited to, those indicated in Section 0300: Specific Site Requirements. The WORK shall include, but not be limited to, the removal and disposition of concrete slabs and foundations, miscellaneous wood, metal, stone and masonry structures, and debris associated with the abandoned mine operation or generated during construction. Clean-up of miscellaneous debris exposed at the surface and randomly located across any site has not been specifically identified due to the impracticality of such extensive identification. However, it is the intent of these Specifications to require removal and disposal of *all surface debris* associated with the abandoned mine operations. Such removal and disposal shall be included in the CONTRACTOR's scope of WORK.

1.02 SUBMITTALS

A. CONTRACTOR shall submit *with the Bid Proposal* demolition and removal procedures and schedule for approval. This should indicate if blasting is to be used in structure demolition.

B. CONTRACTOR shall submit *after execution of the CONTRACT and prior to disposal* proof of permission for debris disposal off site at a licensed disposal site.

1.03 RELATED WORK

A. Section 0270: Site Grading and Earthwork
B. Section 0300: Specific Site Requirements

1.04 CONDITIONS AND RESTRICTIONS

A. Demolition shall be conducted to minimize dust generation and public nuisance.

B. CONTRACTOR shall provide, erect, and maintain temporary barriers and security devices as necessary to ensure safety of CONTRACTOR's personnel, the OWNER's personnel, and the general public.

C. Debris burial in, mixing with, or covering by fill material is not allowed on site.

D. Debris placement in mine openings is only allowed with site by site approval from the OWNER.

E. Materials shall not be burned on site.

PART 2 - PRODUCTS

CONTRACTOR may require materials for demolition and clean-up, such as wrappings or impermeable coverings not otherwise called for in other sections of these Specifications.

PART 3 - EXECUTION

3.01 PREPARATION

CONTRACTOR shall secure any and all required permits for the demolition and clean-up WORK at his or her expense.

3.02 EXECUTION

A. CONTRACTOR shall demolish only those structures and appurtenances indicated. Demolition shall be performed in an orderly and careful manner. CONTRACTOR shall clean up and dispose of all debris exposed at the surface.

B. Demolished materials of every nature shall become the property of the CONTRACTOR and shall be disposed of away from the site or at locations indicated in Section 0300: Specific Site Requirements or on the Drawings.

C. Relics, antiques, artifacts and similar objects as identified by the OWNER remain the property of the OWNER. CONTRACTOR shall notify the OWNER prior to removal and obtain acceptance regarding method of removal. Relics and antiques include, but are not limited to:

1. Cornerstone and contents
2. Commemorative plaques
3. Archaeological relics or finds
4. Historical relics

D. CONTRACTOR shall remove and promptly dispose of any contaminated, vermin-infested, or dangerous materials encountered. Transformers, oil-filled electrical equipment or other toxic materials shall be called immediately to the attention of the OWNER. Disposal of such items shall be at the direction of the OWNER in accordance with EPA and State Health requirements.

E. CONTRACTOR shall remove foundation walls and footings to a minimum three feet below finished grade as indicated in the Drawings unless otherwise directed in Section 0300: Specific Site Requirements.

F. CONTRACTOR shall remove all concrete slabs on grade as indicated in the Drawings unless otherwise directed in Section 0300: Specific Site Requirements.

G. CONTRACTOR shall provide water and an adequate water supply system for dust suppression for haul roads and demolition WORK where dust will cause a public nuisance or as directed by the OWNER. The cost of water will be paid by the CONTRACTOR.

H. Depressions resulting from demolition operations shall be filled with materials, approved by the OWNER, from on the site or from designated borrow areas unless located in an area where further excavation is required to yield the reclamation contours shown in the Drawings. The fill material shall be in accordance with Section 0270: Site Grading/Earthwork.

I. CONTRACTOR shall grade and compact areas affected by demolition to maintain site grades and contours. In no case shall slopes exceed 3h:1v or natural site contours.

J. CONTRACTOR shall remove demolished materials from site in an orderly fashion. CONTRACTOR shall leave site in clean condition for reclamation grading and earthwork.

K. CONTRACTOR shall remove from site all debris created during construction.

L. Final shape and completeness of the WORK shall be subject to approval by the OWNER.

3.03 SALVAGING MATERIALS

All salvaged materials shall become the property of the CONTRACTOR with the exception of relics, antiques or artifacts identified by the OWNER. Salvaged materials from the structures may be stored on-site temporarily, but not beyond the date specified for completion of the CONTRACT. Any value of salvaged materials or costs associated with the removal of equipment, structures, or materials shall be reflected in the bid price amount for Demolition and Clean-up.

PART 4 - MEASUREMENT AND PAYMENT

4.01 MEASUREMENT

A. Measurement shall be per itemized structure or mine site (as specified on the bid sheet) as demolition and clean-up WORK is completed, accepted, and approved by the OWNER.

B. The final quantities for major categorizations of materials may vary from the estimated quantities provided. The estimated quantities are based on information gathered and interpreted from surface investigations.

4.02 PAYMENT

Payment for the demolition and clean-up WORK shall be per itemized structure or mine site, at the BID PRICE upon approval of the OWNER for all of the WORK described in this Section.

END OF SECTION 0240

0250 Mine Closures

PART 1 - GENERAL

1.01 WORK INCLUDED

This section describes the various types of mine closures to be used to seal mine openings. The WORK described in this Section also includes preparation, excavation and backfilling of subsidence openings into mine voids. The requirements for furnishing and placing stone and block closures and backfill closures are described here and are indicated on the Drawings. The WORK includes all preparation, labor, materials, furnishing and placing materials, equipment and incidentals necessary to complete the mine closures.

1.02 SUBMITTALS

A. CONTRACTOR shall submit *with the bid proposal* a list of equipment to be used to complete this section of the WORK.

B. CONTRACTOR shall submit *with the bid proposal* the proposed construction procedures in writing.

C. CONTRACTOR shall submit *after the award of CONTRACT* and *before Notice to Proceed* a copy of the certification of the Certified Person (see Part 1.04.E below) for approval by the OWNER.

D. CONTRACTOR shall furnish the OWNER a set of as-built drawings upon completion of the WORK which shall be required for release of the retainage.

1.03 RELATED WORK

A. Section 0251: Cast-In-Place Concrete
B. Section 0252: Concrete Reinforcement
C. Section 0253: Bat Gate and Shaft Grate Installation
D. Section 0254: Polyurethane Foam Mine Closures
E. Section 0290: Revegetation
F. Section 0300: Specific Site Requirements

1.04 JOB CONDITIONS

PROTECTION

A. CONTRACTOR shall exercise precautions appropriate to working near, over, or in areas prone to subsidence. Such known areas should be flagged by the CONTRACTOR prior to the commencement of the WORK. Personnel shall be informed of special safety procedures for equipment usage and general work in these areas.

B. Personnel shall not enter any mine opening unless under the direction of the Certified Person.

C. No personnel shall be allowed to work under an unsupported mine roof. Temporary support shall be installed under the direction of a Certified Person qualified to determine roof conditions.

D. Smoking or any open flame in or within 100 feet of the mine openings is prohibited.

E. Before any personnel enter any openings a check for explosive and toxic gases shall be made by a Certified Person (a qualified person with current certification to do such WORK under the General Safety Orders of Utah Coal Mines i.e. Mine Foreman and/or Fire Boss). Continuing

checks shall be made throughout the closure operation by the Certified Person.

F. CONTRACTOR shall inspect openings for old dynamite prior to construction activities.

G. Personnel shall wear safety harnesses and be properly and securely anchored to a fixed anchor point while working within 15 feet of vertical openings, unless otherwise approved in writing by the OWNER.

PART 2 - PRODUCTS

A. CONCRETE BLOCK

Solid concrete block shall be high strength with a minimum compressive strength of 3,000 pounds per square inch. Hollow block used as shown on the Drawings must be concrete-filled.

B. BACKFILL

Backfill material shall normally consist of mineral soil, subsoil, or a blend of mineral soil and subsoil. Backfill material shall be free from combustible materials. This shall include but not be limited to wood, wood products, trash and vegetation.

C. MORTAR

Mortar shall be either Masonry Cement, 1:3 mix, Type N, or Portland Cement and Lime, 1:1:6 mix, Type N. Precautions must be taken to prepare and protect mortar during cold weather. Mortar will have a 28 day minimum compressive strength for 2-inch cubes of 700 psi.

D. CONCRETE

Concrete shall be in accordance with Section 0251: Cast-in-Place Concrete.

E. REINFORCEMENT

Reinforcement shall be in accordance with Section 0252: Concrete Reinforcement.

F. FILTER CLOTH

Filter cloth shall be a non-woven geotextile fabric having a minimum thickness of 15 mil in accordance with ASTM D-1777 and a minimum permeability of 10^{-2} centimeters per second, such as Fibertex 150 manufactured by Crown Zellerbach, or an approved equivalent.

G. TEMPORARY MINE ROOF SUPPORTS

1. Mine roof supports shall be wooden posts or approved equal that have the following minimum requirements:

   a. 4½ inch diameter.
   b. Spruce or pine with a specific gravity between 0.35 and 0.48.
   c. Moisture content between 10.8 and 14 percent.
   d. Allowable unit stress of extreme fiber in bending of 750 psi for spruce or 700 psi for pine.
   e. Maximum diameter of knots on one surface no greater than ½ inch.

2. Caps and wedges shall be used for installation of roof supports.

3. Mine roof jacks may be substituted for wooden posts with the approval of the OWNER.

PART 3 - EXECUTION

3.01 PREPARATION FOR MINE CLOSURES

A. CONTRACTOR shall clear and grub the face area of mine openings of all vegetation, wood and debris to the extent shown on the Drawings. CONTRACTOR shall inspect, scale and secure the mine openings to a degree which will make the WORK safe to perform. Particular care shall be taken to make WORK conditions safe in instances where, due to the condition of the opening and the probability of loose soil and rock above the opening, there is danger of a rockfall. For openings to be backfilled the CONTRACTOR shall excavate the brow back to a stable condition prior to initiation of closure operations, unless otherwise directed by the OWNER.

B. The roof and ribs of the mine openings may contain loose rock. Such loose materials shall be scaled by use of tools or equipment extended into the openings before personnel enter the opening for placement of mine roof supports or for any other reason.

C. Loose, unstable materials typically exist just inside the opening. These materials shall be removed from the working surface inside of the mine openings so a solid working surface exists on which to build the mine closures. The working surface shall be inspected, accepted and approved by the OWNER.

D. Temporary mine roof supports shall be installed on no more than four foot centers before any personnel enter the opening for construction purposes.

E. CONTRACTOR shall construct work pad as required.

F. Bat Exclusion: CONTRACTOR shall exclude bats from mine workings prior to installation of permanent closures as required in these specifications. The exclusion process must be conducted during the warm season when bats are flying but before young bats are born (warm season and birthing dates vary depending on geographic location and should be specified by the bat biologist), or in the fall prior to the swarming behavior that leads to hibernation. An attempt to close mines before the warm season may entomb hibernating bats that cannot fly. The preferred method for exclusion of bats from an adit or shaft is to block the portal or shaft opening with 1-inch diameter chicken wire. The wire permits bats to escape and fly out of the mine, but they will not fly back through the wire into the mine. The wire should be placed over the entrance at least a week in advance and shall be left in place until the date of the closure. The wire should be removed during the day and closure should take place immediately.

3.02 INSTALLATION OF MINE CLOSURES

A. BLOCK WALL CLOSURE

1. CONTRACTOR shall construct walls in the adits as specified in Section 0300: Specific Site Requirements. Variation of the location of the walls will be allowed so that CONTRACTOR can select a suitable location for the walls, with approval of OWNER. Parameters for suitable location of the walls shall be as follows:

a. Select an area in which competent rock is found in the back, ribs, and sill (roof, walls, and floor) of the adit.

b. Utilize irregularities in the ribs and back where possible such that the wall can be "keyed" into the rock to provide more strength and integrity to the wall.

c. Locate the wall as far into the adit as is reasonable to reduce visibility of the wall from outside the opening and a maximum of 10 feet with competent brow unless otherwise approved by the OWNER. Allowance for the location of the walls is discussed in Section 0300. Where the remaining portion of the adit left open is unstable or unsafe, backfill shall be placed from the brow to the wall unless otherwise approved by the OWNER.

2. CONTRACTOR shall scale down back and ribs (roof and sides) of the adit, removing any loose rock from the area in which the wall is to be constructed and along access to bulkhead. Any mud, clay, moss or other materials shall be removed where the wall is to be constructed which would be deleterious to the integrity of the wall and would not allow good bonding of the mortar to the rock. CONTRACTOR shall excavate sill (floor) of adit to solid rock where the wall is to be constructed. Drainage shall be provided for any water that tends to accumulate on either side of the bulkhead as described in Part 3.02.A.6 of this Section. Excavated materials shall be cast into the adit behind the bulkhead to minimize surface disturbance in the area.

3. Concrete foundations shall be constructed unless competent foundation rock is encountered which is not friable, subject to deterioration, or otherwise unacceptable and the foundation rock is approved by OWNER. The foundation shall be a minimum of 18 inches in thickness and 30 inches wide to accommodate the 2-foot thick wall. The foundations shall be made of concrete as specified in Section 0251: Cast-In-Place Concrete. Concrete shall be reinforced with No. 4 rebar as shown on the Drawings and as specified in Section 0252: Concrete Reinforcement.

4. CONTRACTOR shall construct walls from foundation or solid rock base if approved by OWNER. Walls shall be constructed of concrete block, native stone, or imported stone. Concrete block walls shall be a minimum of 16 inches thick. Native stone and imported stone walls shall be constructed to a minimum thickness of 2 feet at the base and 18 inches at the top. The wall shall be free of any voids within the wall structure and shall be 100 percent rock and mortar construction. Hollow block bricks, when used, shall be concrete filled. Mortar shall be free of voids and air pockets and shall be firmly packed along ribs and roof of the opening to maintain the integrity of the wall and to make an effective seal.

5. CONTRACTOR shall use the natural shape and irregularities of the mine opening to "key" the wall to the mine opening to provide strength and protection of the wall from damage due to vandalism.

6. Designated openings shall require the installation of a drainage pipe. The drainage pipe shall be located near the base of the stone wall within 15 inches of the intersection of the floor material in the approximate center of the wall or near a low spot along the base. The drain pipe shall extend through the foundation or the base of the wall and a trap shall be formed out-by the wall near the brow as shown on the drawings. The drain pipe shall protrude a minimum of 12 inches on either side of the wall and shall be made from 6-inch nominal diameter, Schedule 80 PVC pipe. The inside end of the pipe shall be firmly supported by block or natural stone. Both the inside and outside ends of the pipes shall be clear of any obstructions which would impair or restrict flow. Both ends of the pipe shall be covered with a protective screen mesh. Gravel shall be installed over the ends of the pipes to protect the pipe from roof falls and plugging. Gravel shall form a drain and cover the top of the pipe with a minimum of 8 inches of material. The gravel drain shall be no less than 18

inches wide and shall extend to and from the end of the pipes a minimum of two feet. Gravel used in the drain channels shall be selected material ranging from 3/4 to 6 inch in size. CONTRACTOR shall extend a drainage channel away from the bulkhead if it is situated such that water could impound near the base.

7. As further protection, grout shall be used to seal the base of the bulkhead and shall be placed to partially cover the drainpipe. Grout should extend one foot to either side of the base of the wall.

8. The portal areas shall be cleared of all building materials, trash and debris. The site shall be left in a clean and finished appearance.

9. Revegetation of sites shall be completed as specified in Section 0290: Revegetation.

10. Final acceptance of the WORK shall be subject to field inspection by the OWNER.

B. BACKFILL CLOSURE

1. CONTRACTOR shall backfill mine openings as described in Section 0300: Specific Site Requirements or as directed by the OWNER. Backfill shall contain sufficient fines to minimize void space.

2. Drainage lines shall be extended, if required, to the projected limits of the backfill. The drain line shall be placed on a minimum slope of 2 percent and firmly bedded with well-compacted sand and gravel. The end of the pipe shall be protected as described in Part 3.03.A.7.

3. Backfill shall be placed in mine openings to minimum dimensions described and in a manner to eliminate voids. CONTRACTOR shall construct a work pad in front of the opening as required to allow for uniform access to ram the backfill into the opening utilizing a ram or backhoe bucket. Care should be taken not to push the wall out if one has been installed. Materials which require compaction shall be tamped to achieve compaction such that any additional settlement of the fill will not result in reopening of the portal.

4. Final shape of the fill shall be mounded over the opening and blended into surrounding contours as much as practical. Runoff and snowmelt shall be diverted away from and across the fill by use of small channels containing light riprap so that the fill does not erode or impound water.

5. Revegetation of sites shall be completed as specified in Section 0290: Revegetation.

6. The portal areas shall be cleared of all building materials, trash and debris. The site shall be left in a clean and finished appearance.

7. Final acceptance of the WORK shall be subject to field inspection by the OWNER.

C. HAND BACKFILL CLOSURE METHOD

1. Hand Backfill Closure Method shall be used only in places inaccessible to heavy equipment as designated in Section 0300: Specific Site Requirements. The backfill requirements of Section 0250: Mine Closure, Part 3.03.B apply except as provided for equipment or approved by the OWNER.

2. CONTRACTOR shall obtain backfill materials from areas specified in Section 0300: Specific Site Requirements, or as directed by the OWNER.

3. Backfill materials shall be placed in 12 inch thick horizontal lifts in the locations and to the extent shown on the Drawings.

D. WALL AND BACKFILL CLOSURE

Designated mine openings shall be backfilled after the installation of the wall. Bring backfill to the grades shown in the Drawings or as designated in Section 0300: Specific Site Requirements to blend with natural contours. Walls shall be installed per Section 0250, 3.02 A, B, and C.

E. VERTICAL SHAFT BACKFILL CLOSURE METHOD

1. Timber and debris shall be removed from openings to the extent safely possible.

2. CONTRACTOR shall inspect the collar of the opening and determine required precautions for safe completion of WORK. Installation of a short conveyor belt or a ramp may be required.

3. Shaft shall be filled with backfill material to a height above the collar of the shaft to provide drainage away from the opening. The backfill shall be well-graded with a maximum particle size of approximately 2 feet in diameter.

4. Filter cloth shall be installed as shown on the Drawings.

5. CONTRACTOR shall place and compact the backfill starting five feet below the surface. Suitable compaction energy shall be applied in this zone in one-foot lifts by either pressure from the back of the backhoe bucket or other means accepted and approved by the OWNER. The upper five feet of backfill shall not contain any material that may have elevated sulfate concentrations.

6. The backfill shall be mounded a minimum of 24 inches above the adjacent grade, or shall be sloped at 3h:1v and extend a minimum 3 feet horizontal distance beyond the edge of the shaft.

3.03 MINE CLOSURE GRADING

A. CONTRACTOR shall bring backfill to the grades shown on the Drawings or to blend with natural contours. Backfill shall be free of voids and shall be compacted by mechanized equipment or hand-held mechanical compactors in one foot lifts.

B. CONTRACTOR shall extend the drainage line (if required) to the projected limits of the backfill. The drain line shall be placed at a minimum slope of 2 percent and firmly bedded with well compacted sand and gravel. The end of the pipe shall be protected as described in Part 3.03.A.7.

C. The backfilled slopes shall be covered with a minimum of 6 inches of soil/rock fill available on site from areas designated by the OWNER.

D. Revegetation and mulching of the disturbed areas shall be performed in accordance with Section 0290: Revegetation.

E. Final shape and completeness of the WORK shall be subject to approval by the OWNER.

3.04 MINE LOCATION MONUMENTS

A. CONTRACTOR shall install at each mine closure a permanent monument (aluminum survey cap). OWNER will provide and CONTRACTOR will install the survey cap.

B. At backfill closures, monuments shall be installed on rebar stakes. Stakes shall be #5 (? -inch diameter) rebar, normally 3 to 4 feet long. The rebar shall be securely anchored in the ground with the end extending above the final grade 2 to 6 inches. CONTRACTOR may opt to use soil plates, deadmen, bends, or other devices to ensure that the rebar is securely anchored. The exposed end of the rebar shall be squarely cut and free of bends, flaring, mushrooming, or burrs that would prevent proper seating of the survey cap. Seating of the cap onto the rebar shall be done taking precautions not to mar the text. Where site conditions permit and with approval of OWNER, monuments may be set directly into bedrock with epoxy resin as described below.

C. At structural closures (bulkheads or steel grates), monuments may be set in concrete footers, grade beams, or seams while the concrete is wet or set in bedrock with epoxy resin. Installation in bedrock requires drilling a 1¼-inch diameter by 2 inch deep hole to receive the cap.

D. The placement of the monument will be determined by the OWNER, but typically it will be centered in or adjacent to the mine opening for backfill closures. Monuments should not be placed where it is necessary to climb onto the closures to read them. Monument positioning should consider the potential for vandalism and the potential for siltation that could bury the cap. Monuments may be installed inby grate closures, but not so deep that they cannot be easily read.

PART 4 - MEASUREMENT AND PAYMENT

4.01 BASIS OF PAYMENT

Basis of payment for the WORK will be on the BID PRICE per opening for completion of all the WORK as described in this Section. Breakdown of the WORK into unit prices for individual mine openings shown in the Bid Schedule will be used in determining partial payment or adjustment of the total BID PRICE for this Section as the WORK progresses.

4.02 MEASUREMENT

Measurement for mine closures will be on the BID PRICE per mine opening. Measurement will be based on and compared to the dimensions and quantities identified on the bid sheets, these Specifications and Drawings. The OWNER will request intermediate measurements to determine progress of the WORK.

4.03 PAYMENT

A. Payment for mine closures will be for each mine site at the BID PRICE. Payment will only be for those closures which are complete, accepted, and approved by the OWNER. No partial payments will be made for individual mine openings.

B. Payment at the UNIT PRICE for additional quantities will be made for mine closures when final quantities are greater than 15 percent in excess of the estimated quantities shown on the bid sheet for a given mine site. Such unit price payment will require proof of additional quantities provided by the CONTRACTOR and approval of the OWNER, and shall be full compensation for the approved additional masonry or backfilling. Reduction of payment for lesser quantities of masonry or backfill will also be made by the OWNER for quantities greater than 15 percent

below the estimated quantity shown on the bid sheet for a given mine. Such UNIT PRICE adjustment will require approval of the OWNER and will be full compensation for approved additional or reduced mine closure quantities.

END OF SECTION 0250

0251 Cast-In-Place Concrete

PART 1 - GENERAL

1.01 WORK INCLUDED

Cast-in-place concrete shall be used in the WORK for mine closures. This Section provides the material standards, procedures and quality control that shall be required for cast-in-place concrete.

1.02 SUBMITTALS

A. Concrete

1. CONTRACTOR shall submit *with the Bid Proposal* laboratory reports indicating that the supplier's concrete ingredients meet requirements specified.

2. CONTRACTOR shall submit *before use of cast-in-place concrete in WORK* design mixes and laboratory test reports indicating that the concrete ingredients and proportions will result in concrete mixes meeting requirements specified.

B. Batch Tickets

CONTRACTOR shall submit, *with each batch delivered*, delivery tickets from the concrete supplier setting forth the following information:

1. Name of Supplier
2. Name of batching plant and location
3. Date
4. Serial number of ticket
5. Truck number and batch number
6. Contract number and location
7. Volume of concrete (cubic yards)
8. Maximum size of aggregate
9. Type and brand of cement
10. Weight of cement
11. Maximum size of aggregate
12. Weights of fine and coarse aggregates
13. Types and amounts of admixtures
14. Weight of water, or, alternatively, the water:cement ratio

1.03 RELATED WORK

A. Section 0250: Mine Closure
B. Section 0252: Concrete Reinforcement

1.04 QUALITY ASSURANCE

Design Criteria:

A. Portland Cement Concrete Mixture

Concrete for closures and structural slabs shall have a minimum compressive strength of 3,000 psi in 28 days. The concrete shall be proportioned in accordance with ACI 211. The type of cement used shall be Portland, Type II (ASTM C150). Air entrainment shall be furnished in all concrete. Air content shall be 5% $\pm$ 1%.

B. Formwork

As outlined in ACI 301, Chapter 4.

C. Reference Standards (Latest Editions)

1.	ACI 211	Recommended Practice for Selecting Proportions for Normal Weight Concrete
2.	ACI 301	Structural Concrete for Buildings
3.	ACI 302	Guide for Concrete Floor and Slab Construction
4.	ACI 304	Recommended Practice for Measuring, Mixing, Transporting and Placing Concrete
5.	ACI 305	Recommended Practice for Hot Weather Concreting
6.	ACI 306	Recommended Practice for Cold Weather Concreting
7.	ASTM C 31	Standard Method of Making and Curing Concrete Test Specimens in the Field
8.	ASTM C 33	Specification for Concrete Aggregates
9.	ASTM C 39	Test for Compressive Strength of Cylindrical Concrete Specimens
10.	ASTM C 94	Specification for Ready-Mixed Concrete
11.	ASTM C 150	Specification for Portland Cement
12.	ASTM C 172	Sampling Fresh Concrete
13.	ASTM C 494	Specification for Chemical Admixtures for Concrete

PART 2 - PRODUCTS

MATERIALS

2.01 CEMENT

Cement shall be Type II Portland cement, conforming to ASTM C 150, unless otherwise approved by the OWNER.

2.02 FINE AND COARSE AGGREGATE

Shall conform to ASTM C 33

2.03 WATER

Water shall be potable.

2.04 ADMIXTURES

A. Chemical Admixtures: ASTM C 494

B. Calcium Chloride will not be permitted.

2.05 FORMWORK

Form ties, fabricated so that portion remaining in the structure is at least two inches back from concrete surface.

PART 3 - EXECUTION

3.01 FORMWORK

A. Forms shall be provided for all concrete except where instructed by the OWNER.

B. Form surfaces which will be in contact with concrete shall be treated with an effective bond-breaking form coating. Such coating shall also effectively prevent the absorption of water from the concrete by plywood forms.

3.02 MIXING

A. Concrete may be mixed at the job site or delivered as "ready mix" at the CONTRACTOR's option.

B. If mixed on the site, equipment and mixing procedures shall conform to ACI 301, Chapter 7.

C. If "ready mixed" concrete is used, it shall be mixed and transported in accordance with ASTM C 94.

3.03 HOT WEATHER CONCRETING

Conform to the requirements of ACI 305

3.04 COLD WEATHER CONCRETING

Conform to the requirements of ACI 306

3.05 PLACING

A. Concrete shall be placed in accordance with the requirements of ACI 304, Chapter 6.

B. Concrete shall be placed in forms in horizontal layers of 12 to 18 inches as near as possible to its final location.

C. Each horizontal layer shall be consolidated by using a mechanical vibrator. The vibrator shall extend into the underlying layer to weld the two layers together. The use of vibrators to move concrete horizontally within the forms shall not be permitted.

D. Concrete shall not be allowed to free fall more than 6 feet within the confines of the form work. Use tremies, hoses, chutes, or other devices where greater distance is required.

3.06 FIELD QUALITY CONTROL

The OWNER may require random samples for the purpose of quality control. CONTRACTOR shall take sample specimens of the concrete in cylindrical containers in accordance with ASTM C 31 at the point of deposit as follows:

A. One sampling, consisting of a minimum of three cylinders, shall be made for each batch of ready-mix concrete. At least one sampling shall be made for each 50 cubic yards of concrete or for each day of placing.

B. The samples shall be taken in accordance with ASTM C 172.

C. All three sample cylinders will be taken at the same time: one cylinder to be used for a 7-day test and two for a 28-day test. The average of the 28-day test results will be used for

determining acceptance.

D. The 7-day, and 28-day tests shall be performed in accordance with ASTM C 39.

3.07 CURING

Comply with the requirements of ACI 301.

3.08 PATCHING

All damaged and honeycombed areas shall be repaired in accordance with ACI 301, Chapter 9.

3.09 FINISH

A. Formed Surfaces - After removal of forms, patch tie holes and defects. Remove fins from surfaces.

B. Unformed Surfaces - Screed surfaces to indicated dimensions.

3.10 CONSTRUCTION JOINTS

A. Before placement of fresh concrete, CONTRACTORS shall clean reinforcing steel, welded wire fabric and joint surfaces of hardened concrete.

B. Construction joints shall be prepared and bonded as provided in Section 6 of ACI 301 for elevated slabs and ACI 302 for slabs on grade.

PART 4 - MEASUREMENT AND PAYMENT

Measurement and payment for cast-in-place concrete will be per the BID PRICE per mine site in Section 0250: Mine Closure.

END OF SECTION 0251

0252 Concrete Reinforcement

PART 1 - GENERAL

1.01 WORK INCLUDED

Concrete reinforcement is used in various parts of the WORK, described in Part 1 of Section 0251: Cast-in-Place Concrete. This section describes the requirements for concrete reinforcement in concrete structures. Placement of concrete reinforcement shall be as shown on the Drawings.

1.02 RELATED WORK

A. Section 0250: Mine Closure
B. Section 0251: Cast-in-Place Concrete

1.03 QUALITY ASSURANCE

Reference Standards (Latest Editions)

A. ACI 318 Building Code Requirements for Reinforced Concrete

B. ASTM A 615 Specifications for Deformed and Plain Billet-Steel Bars for Concrete Reinforcement

PART 2 - PRODUCTS

MATERIALS

2.01 Reinforcing steel shall be made from plain or deformed new billet stock and shall conform to ASTM A 615, Grade 60.

2.02 Reinforcement chairs, hangers, spacers, or other supports shall be non-corrosive.

2.03 All reinforcement shall be free from oil, mill scale and excessive rust, or other coatings that will destroy or reduce bond.

PART 3 - EXECUTION

INSTALLATION

3.01 Reinforcement shall be accurately formed to the dimensions indicated.

3.02 All bars shall be bent cold and shall not be straightened in a manner which will injure the material.

3.03 Bars shall be spaced and positioned as shown on the Drawings.

3.04 Three (3) inches of concrete cover shall be provided for main reinforcement.

3.05 Reinforcement shall be spliced and tied in accordance with the requirements of ACI 318, and as shown in the Drawings.

PART 4 - MEASUREMENT AND PAYMENT

No separate measurement and payment shall be made for concrete reinforcement. OWNER will ascertain that concrete reinforcement meets the requirements of this section and is sized and placed in accordance with the Drawings and these Specifications. OWNER's approval for pay items including concrete reinforcement will require the OWNER's acceptance and approval of the concrete reinforcement.

END OF SECTION 0252

0253 Bat Gate & Shaft Grate Installation

PART 1 - GENERAL

1.01 WORK INCLUDED

A. CONTRACTOR shall construct steel gates or grates in the portals and shafts as specified in Section 0300: Specific Site Requirements and in accordance with this section. The purpose of the gates and grates is to maintain airflow and wildlife access while preventing human access into the mine.

B. This work shall consist of fabricating and installing steel bat gate or rebar shaft grate closures within specific mine adits and shafts. Work shall include excavation of loose material and trimming of the mine opening; drilling, placing, and grouting anchors; concrete footers; and fabrication, installation, and welding of steel gates or grates in accordance with these specifications. Refer to the Drawings for construction details.

C. The dimensions shown on Standard Drawings are generic and based upon a standard design. Actual dimensions will be determined by the mine opening size and site preparation. The CONTRACTOR shall make the necessary measurements and adjustments to ensure that a competent gate or grate is constructed that will prevent human access. Very large or irregularly shaped openings may require custom fitting or modification of the generic design in consultation with the OWNER. Minor variations in the location of the bat gate will be allowed so that the CONTRACTOR may select a stable location for the bat gate, with the approval of the OWNER.

1.02 RELATED WORK

A. Section 0250: Mine Closure
B. Section 0251: Cast-in-Place Concrete
C. Section 0252: Concrete Reinforcement

PART 2 - PRODUCTS

MATERIALS

2.01 BAT GATE COMPONENTS

All steel used for bat gate closure construction shall be 12-14% manganese steel (Manganal® steel or equivalent). Round stock used for horizontal crossbars, perimeter supports, anchor pins, and supplemental vertical bars shall be #8 bars (1 inch diameter). Flat stock used for vertical supports, roof anchor plates, gussets, and lock boxes shall be 4” x ½” plate. Welding rod shall be suitable for use on manganese steel.

2.02 CORRUGATED METAL PIPE (CMP)

Corrugated metal pipe shall be fabricated of 16 gauge (0.064-inch thickness) steel and shall have 2:-inch by 2-inch corrugations. Fabrication shall be riveted (5/16-inch/ single rivet), welded or helical. Continuous lap seam and continuous welded seam shall be considered equivalent in strength to two fasteners per corrugation seam. Fabrication must meet AWS @Structural Welding Codes@ and AASHTO 1977 Standard Specifications for Highway Bridges. CMP galvanization shall meet the requirements of ASTM A386 for assemble products for ASTM A123 for rolled, pressed, and forged steel shapes. Galvanizing repair paint shall meet specification MIL-P-21035. All pipe couplings and hardware shall be compatible with CMP.

2.03 REBAR SHAFT GRATE COMPONENTS

Steel used for shaft grate crossbars and anchor pins shall be mild steel rebar meeting the requirements of ASTM A 615. Bars shall conform to Grade 60. Rebar used for shaft grate crossbars and anchor pins shall be #8 bars (1 inch diameter).

2.04 CONCRETE REINFORCEMENT

Steel used for concrete reinforcement shall be mild steel rebar meeting the requirements of ASTM A 615. Bars other than ties shall conform to Grade 60. Ties shall conform to Grade 40 or Grade 60. Rebar used for concrete reinforcement shall be #4 bars (½ inch diameter). All reinforcing steel shall be free from rust, scale, or other coating that will destroy or reduce the bond with the cement-grout.

2.05 CEMENT-GROUT

Cement-grout shall consist of a mixture of sand, aggregate, and cement capable of attaining a compressive strength of 3,000 psi in 28 days. Maximum size of coarse aggregate shall be ¾ inch.

2.06 EPOXY RESIN GROUT

Epoxy resin grout shall conform to the requirements of ASTM C881, Type IV, grade 3.

2.07 PADLOCKS

Padlocks for locking bat gates shall have a minimum ? ” diameter shackle. Padlocks shall be heavy duty, such as the Master® No. 5D or equivalent. All locks shall be keyed the same.

PART 3 - EXECUTION

3.01 GENERAL

CONTRACTOR shall construct steel gate closures in adits and steel grate closures in shafts as specified below, as shown on the Drawings, and as specified in Section 0300: Specific Site Requirements. The final design, fabrication, and erection of the gate or grate closure shall conform to the guidelines established with these specifications and the drawings. The final design shall be the responsibility of the CONTRACTOR, subject to OWNER's approval.

3.02 BAT GATE INSTALLATION

A. Location. Variation of the bat gate closure location will be allowed so that the CONTRACTOR can select a suitable location as approved by OWNER. Parameters for suitable location shall be as follows:

1. Select an area in which competent rock is found in the roof, ribs, and floor of the adit.

2. Utilize smooth, non-fractured faces in the ribs and roof, where possible, such that the gate can be "keyed" into the rock to provide more strength and integrity to the closure.

3. Locate the bar gate closure a minimum of three feet into the adit or as approved by the OWNER.

B. Preparation. The CONTRACTOR shall scale down the roof and ribs of the adit, removing any loose rock from the area in which the bat gate closure is to be constructed and along access to the closure. The portal shall be cleaned and shaped as directed by OWNER. Historic structural features shall be preserved and maintained.

C. The concrete footer shall be poured in a trench excavated to the dimensions shown on the Drawings. Concrete shall be reinforced with #4 (½-inch) rebar on 12-inch centers with a minimum 2-inch concrete cover on all surfaces. Concrete shall not be poured until the gate steel and rebar have been installed. Concrete shall be mounded as necessary so that the gap between the top of the footer and the bottom crossbar of the gate is no larger than 4 inches. Forms will not be required unless called for by sloping conditions or deep unconsolidated floor material. If used, forms shall be sufficiently braced to prevent movement or dislocation during or after setting the gate steel and rebar in place. Forms shall be removed upon completion of the closure. Concrete construction shall be done in accordance with Section 0251: Cast-In-Place Concrete and Section 0252: Concrete Reinforcement.

D. Anchor pins shall be doweled into the adit walls a minimum of 12 inches and grouted into place with either cement or epoxy resin. The CONTRACTOR shall determine the means of drilling into the rock and submit the method to the OWNER for approval prior to the start of the drilling operations. Anchor pins shall protrude from the adit ribs to attach the perimeter supports and roof anchor plates. Anchor pins shall be fillet welded to the perimeter bars. Roof anchor plates shall be 4 inches by 8 inches and welded with a continuous bead to the top of the vertical supports and the anchor pins. There shall be at least two anchor pins on each side of the adit and at least one pin for each roof anchor plate. Anchor pins shall be located in competent rock affording the most secure placement. Anchor plate and pin locations and dimensions may be adjusted to fit site conditions with approval of OWNER.

E. Perimeter bars shall be fillet welded to the anchor pins to provide a continuous steel lining on the adit ribs. Perimeter bars shall be bent or cut into segments to conform closely to irregular surfaces, with a maximum gap of 6 inches between the rib and the bar. If cut into segments, ends of segments shall be butt-welded to each other to form a continuous piece. Perimeter bars shall be installed on the outby side of the gate or as directed by OWNER. However, the perimeter bar at the position of the removable locking bar (crossbars 4 and 5, perimeter bar welded to crossbars 3 and 6) must be on the inby side of the gate.

F. The vertical supports shall have 1? inch diameter holes at the required spacing to accept the horizontal crossbars with a minimum of play. Vertical supports shall extend into the concrete footer and shall be positioned as close to the adit ribs as possible, with a maximum gap of 16 inches between the rib and the vertical support. Vertical supports shall be plumbed as directed by OWNER. The tops of the vertical supports shall be welded to the roof anchor plates with a continuous bead.

G. Horizontal crossbars below a height of 48 inches above the top of the footer shall be spaced on 5-inch centers for a maximum gap between bars of 4 inches. Horizontal crossbars over 48 inches high shall be spaced on 6½-inch centers for gaps between bars of 5½ inches. With vertical supports and supplemental vertical bars in place, no opening in the bars below 48 inches high shall be larger than 24 inches by 4 inches. There shall be at least one opening in the top tier of bars that is 24 inches by 5½ inches, but no opening in the bars above 48 inches high shall be larger than this. Ends of horizontal crossbars shall be installed to within one inch of the adit rib surface. Except for the removable locking bar, horizontal crossbars shall be fillet welded at each intersection with the perimeter bars and supplemental vertical bars and spot welded at each intersection with the vertical supports.

H. Supplemental vertical bars shall be installed on the outby side of the horizontal crossbars on 24½-inch centers as necessary so that no gate opening is greater than 24 inches wide. Supplemental vertical bars shall be fillet welded to horizontal crossbars at each intersection. Supplemental vertical bars shall extend down to the concrete footer.

I. The lock box shall be constructed to the shape and dimensions shown on the drawings with fillet welds at all joints. The box shall be welded onto the vertical support at the position of the fourth and fifth horizontal crossbars from the bottom. Tolerances for the lock mechanism construction shall be sufficient to prevent vandals from accessing the padlock with common hand tools. Supplemental shields may required to protect the mechanism.

J. The fourth and fifth horizontal crossbars shall be welded together with spacers and gussets to form a single removable, lockable unit as shown on the Standard Drawings. Gussets 4 inches square shall be fillet welded to the crossbars and spacers on both sides with a continuous bead. The lockbox ends of the crossbars shall be shaped as shown on the drawings to accept the padlock. The free ends of the crossbars of the removable unit, when installed, shall not extend beyond the vertical support more than 18 inches. Any remaining gap between the ends of the removable crossbars and the adit rib shall be filled with immovable crossbars and vertical bars as required, following the same pattern as the rest of the gate.

K. Upon completion, soil or rock excavated for the closure preparation and footer trench shall be replaced or scattered to blend with the surroundings. The portal area shall be cleared of all construction materials, formwork, and construction-generated trash and debris. The site shall be left with a clean and finished appearance.

L. All horizontal crossbars shall be continuous. Joints, if required, shall be butt joints, with bar ends welded to each other to form a continuous piece.

M. Additional bars or plates may be required to close gaps due to irregularities in the adit rib surface or as supplemental supports, gussets, or lock shields.

N. All field welds shall be in accordance with the requirements of the American Welding Society (AWS) D.1.1.

O. Variation in the generic design or custom fitting may be required to accommodate site-specific conditions. Section 0300: Specific Site Requirements may specify alternate materials, dimensions, or design modifications for specific mine openings.

3.03 REBAR SHAFT GRATE INSTALLATION

A. Location. Variation of the location of the shaft grate will be allowed so that CONTRACTOR can select a suitable location for the shaft grate, with approval of OWNER. Parameters for suitable location of the rebar shaft grate shall be as follows:

1. Select an area in which competent rock is found around the collar of the shaft, if possible.

2. Select an area with minimum irregularities in the collar to avoid excessive site preparation for the construction of the grade beam around the collar.

3. Locate the grade beam at a reasonable distance (typically 3 feet minimum, or as directed by the OWNER) from the shaft collar to reduce the possibility of collapse of the collar of the shaft.

4. Grates at shafts with competent rock collars where grade beams are omitted shall be installed at grade or inside the opening to a maximum depth of 3 feet below grade.

B. Preparation. CONTRACTOR shall excavate to solid rock where the grade beam is to be constructed where the depth does not exceed two feet to bedrock. Any mud, clay, moss, or

other materials where the grade beam is to be constructed which would be deleterious to the integrity of the grate or grade beam and would not allow good bonding of the concrete to the rock shall be removed. Historic structural features shall be preserved and maintained. Drainage shall be provided for any water that would accumulate on either side of the grade beam. Excavated materials shall be set aside for replacement later.

C. Where possible, concrete grade beams shall be constructed on competent foundation rock which is not friable, subject to deterioration, or otherwise unacceptable and the foundation rock is approved by OWNER. The grade beam shall be a minimum of 12 inches high and 12 inches wide. Grade beams for grates larger than 15 feet in either dimension (measured from the interior sides of the grade beams) shall be a minimum of 18 inches high and 12 inches wide, or as directed by OWNER. Grade beams shall be pinned to the foundation rock using #8 rebar anchor pins installed a minimum of 18 inches into the rock, grouted, and set 2 inches below the upper surface of the grade beam. Rebar anchor pins shall be located on 8-foot centers maximum.

D. Forms will be required for all grade beams. Forms shall be sufficiently braced to prevent movement or dislocation during or after setting the grate steel and rebar in place. Concrete shall be reinforced with #6 (¾-inch) rebar as shown on the Drawings. Concrete shall not be poured until the grate steel and rebar have been installed. Concrete shall be poured in one continuous operation and shall be free of cold joints. The grade beam shall be free of any voids within the beam structure and shall be 100 percent concrete construction. Concrete construction shall be done in accordance with Section 0251: Cast-In-Place Concrete and Section 0252: Concrete Reinforcement.

E. Grates larger than 15 feet in either dimension (measured from the interior sides of the grade beam) shall be constructed with a supplemental support for the grate. This support shall be a mild steel W8 x 15 I-beam centered in the long-dimension sides, and running across the short dimension of the grate. The I-beam support shall be positioned directly beneath the crossbars and will be embedded in the grade beam 4 inches at each end. The height of the grade beam will be adjusted as needed to accommodate additional height of the I-beam support.

F. Crossbars shall be installed in the grade beams running each direction on 8-inch centers to form a square grid. Crossbars shall be positioned a minimum of 4 inches below the top surface of the grade beam. Crossbars running the short dimension of the grate shall be placed underneath, except where there is a supplemental I-beam support. Each intersection of the crossbar grid shall be fillet welded on the upper side.

G. In shafts with competent collars, grade beams may be omitted with approval of the OWNER. Rebar anchor pins shall be installed a minimum of 12 inches into the collar. At least 4 anchor pins shall be installed, with a maximum spacing of 8 feet between pins. Support bars shall be welded to the anchor pins. Grate crossbars shall be installed on the support bars, running each direction on 8-inch centers to form a square grid. Each intersection of the crossbar grid and each contact with the support bars shall be fillet welded on the upper side.

H. Crossbars shall be continuous. Lap joints, if required, shall be a minimum of 5 inches with continuous fillet welds along both sides of the lap joint.

I. All field welds shall be in accordance with the requirements of the American Welding Society (AWS) D.1.1.

J. Upon completion, the collar areas shall be cleared of all construction materials, formwork, and construction-generated trash and debris. Material excavated for the grade beam preparation shall be backfilled against the beam. Excess material shall be blended into the surrounding

area. The site shall be left with a clean and finished appearance.

K. Variation in the generic design or custom fitting may be required to accommodate site-specific conditions. Section 0300: Specific Site Requirements may specify alternate materials, dimensions, or design modifications for specific mine openings.

3.04 CMP BAT GATE (ADIT GATE) INSTALLATION

A. Bat gates shall be installed in CMP culverts in unstable locations where gates cannot be anchored directly to competent rock. Culverts may be round or elliptical. Culvert diameters and lengths will be specified in Section 0300: Specific Site Requirements. Culverts will typically be the largest diameter that will fit the opening. Culverts will typically extend inby the brow to competent rock or a minimum distance of twice the adit height. Culverts will typically extend outby the brow 2 feet past the backfill line.

B. Adit Preparation. The CONTRACTOR shall scale down the roof and ribs of the adit, removing any loose rock from the area in which the CMP bat gate closure is to be constructed and along access to the closure. The portal shall be cleared of obstructions, trimmed, and shaped as directed by OWNER to receive the culvert. Historic structural features shall be preserved and maintained.

C. Pipe Bed. A pipe bed of sand, crushed rock, fine mine dump material (minus 3 -inch) or equivalent shall be placed a minimum 4 inches thick on the adit floor. The bed shall have a constant grade and shall provide continuous support for the culvert along its entire length. Where the height of the adit is substantially greater than the culvert diameter, unclassified fill maybe placed in the adit to raise the culvert to the desired elevation. Pipe bedding will then be placed on the unclassified fill.

D. Culvert Installation. The culvert shall be slipped into position in the adit onto the pipe bed. The culvert shall be supported by bedding along its entire length when in place. Care shall be taken to avoid buckling or joint separation during handling and subsequent backfilling operations.

E. Bat Gate Installation. The bat gate may be installed before or after placement of the culvert in the adit. The bat gate shall be installed as described in Part 3.02 above, with the following changes: the vertical supports and horizontal crossbars extend through the culvert a minimum of 6 inches and the perimeter bars are placed on the outside of the culvert. All crossbars shall be spaced on 5-inch centers for a maximum gap between bars of 4 inches. No opening in the bars shall be larger than 24" x 4".

F. Headwall. A concrete headwall shall be constructed around the culvert and bat gate. The headwall shall be a minimum of 12 inches thick and shall extend out from the culvert a minimum of 12 inches in each direction. The headwall shall be centered on the bat gate. The concrete shall be reinforced with a single mat of #4 (1/2-inch) rebar on 12-inch centers. Concrete shall not be poured until the gate steel and rebar have been installed. Concrete shall be poured in one continuous operation and shall be free of cold joints. The headwall shall be free of any voids and shall be 100 percent concrete construction. Concrete construction shall be done in accordance with Section 0251: Cast-In-Place Concrete and Section 0252: Concrete Reinforcement.

G. Backfill. The gap between the culvert and the adit walls shall be completely backfilled for the full length and full circumference of the culvert. Polyurethane foam (PUF) shall be used to plug the interior reach of the gap. PUF application shall be in accordance with section 0254: Polyurethane Foam Shaft Closure. PUF can be injected through holes drilled in the culvert

every three feet to reach inaccessible areas. Worker area shall be adequately ventilated during PUF installation. Unclassified fill shall be used to fill the exterior reach of the gap. Earthen backfill shall extend a minimum of 4 feet inby the brow. Backfill shall be placed by hand and tamped. Backfill outby the brow may be place by machine and shall be placed in 12-inch lifts and compacted until reaching the top of the pipe. The area around the culvert and headwall shall be backfilled to blend with the adjacent slopes. Final grade shall provide positive drainage away from the adit.

H. Upon Completion, the area shall be cleared of all construction materials, formwork, and construction-generated trash and debris. The site shall be left in a clean and finished appearance.

I. Variations in the generic design or custom fitting may be required to accommodate site-specific conditions. Section 0300: Specific Site Requirements may specify alternate materials, dimensions, or design modifications for specific mine openings.

PART 4 - MEASUREMENT AND PAYMENT

4.01 BASIS OF PAYMENT

Basis of payment for the WORK will be on the BID PRICE per opening for completion of all the WORK as described in this Section. Breakdown of the WORK into unit prices for individual mine openings shown in the Bid Schedule will be used in determining partial payment or adjustment of the total BID PRICE for this Section as the WORK progresses.

4.02 MEASUREMENT

Measurement for mine closures will be on the BID PRICE per mine opening. The BID PRICE shall include all costs for labor, materials, equipment and all other items necessary for completion of the work as described in this section. Measurement will be based on and compared to the dimensions and quantities identified on the bid sheets, these Specifications and Drawings. The OWNER will request intermediate measurements to determine progress of the WORK.

4.03 PAYMENT

A. Payment for mine closures will be for each mine site at the BID PRICE. Payment will only be for those closures which are complete, accepted, and approved by the OWNER. No partial payments will be made for individual mine openings.

B. Payment at the UNIT PRICE for additional quantities will be made for mine closures when final quantities are greater than 15 percent in excess of the estimated quantities shown on the bid sheet for a given mine site. Such unit price payment will require proof of additional quantities provided by the CONTRACTOR and approval of the OWNER, and shall be full compensation for the approved additional grate quantity. Reduction of payment for lesser quantities of installed grate will also be made by the OWNER for quantities greater than 15 percent below the estimated quantity shown on the bid sheet for a given mine. Such UNIT PRICE adjustment will require approval of the OWNER and will be full compensation for approved additional or reduced mine closure quantities.

END OF SECTION 0253

0254 Polyurethane Foam Mine Closures

PART 1 - GENERAL

1.01 DESCRIPTION

The polyurethane foam (PUF) closure of adits consists of installing a bulkhead form, installing PUF to specifications, and backfilling over the PUF with random fill. In shafts, the closure work consists of installing a bottom form, installing PUF to specifications, installing drainage material, topping the PUF with a layer of concrete, and backfilling over the PUF to the specified level with random fill. For shafts, one ventilation/drainage pipe is required. Refer to the drawings for construction details.

1.02 SUBMITTALS

CONTRACTOR shall submit *with the bid proposal* the proposed construction procedures, including a description of the form materials to be used and the foam application equipment or method.

1.03 RELATED WORK

A. Section 0250: Mine Closures
B. Section 0251: Cast-In-Place Concrete
C. Section 0252: Concrete Reinforcement
D. Section 0300: Specific Site Requirements

PART 2 - PRODUCTS

MATERIALS

A. FORMWORK

1. The forms and cross members may consist of any commonly available building materials capable of sustaining the initial lift of two to four feet of PUF. Examples of acceptable forms and cross members include but are not limited to, the following:

   CROSS-MEMBER & BOTTOM FORM
   - Rebar & Plywood
   - 2x4s & Cardboard or Chicken Wire
   - Dowels & Paneling
   - Cardboard Tubes & Carpeting
   - Blocks of PUF (generated onsite)
   - Waterbed Mattresses (inflated remotely in the shaft with a hose and air compressor)

2. Any combination of the above noted materials that achieves the required performance will be acceptable. Alternate bottom forms will be acceptable upon approval by the OWNER.

3. Any breach in the bottom form caused by vandals or rock fall is required to be repaired before the arrival of the PUF applicators to the site. The CONTRACTOR is responsible for the integrity of the bottom form, and the loss of any polyurethane should it fail.

B. POLYURETHANE FOAM (PUF)

PUF is required to have a minimum installed density of 1.85 pounds per cubic foot (pcf). PUF characteristics shall conform to the minimum following standards:

PUF CHARACTERISTIC	STANDARD	SPECIFIED IN
Density	1.85 pcf, nominal	
Closed cell content	90%	ASTM D-2856
Compressive strength	25 psi	ASTM D-1621
Water absorption	1% by volume	ASTM D-2127
Exothermic Reaction Rate	Low	
Fire Resistance	Low	ASTM D-1692

Polyurethane foam used may not contain any CFC's (chlorinated fluorocarbons).

C. PROPORTIONING UNIT

1. The proportioning unit shall be capable of attaining a minimum temperature of 125°F. The proportioning unit shall be Gusmer Model H-11 or equivalent. For remote sites, or with approval of the OWNER, smaller capacity proportioners will be acceptable. In this event, the proportioner shall be the Gusmer FF, or equivalent.

2. Minimum heated hose length from proportioner to gun shall be 80 feet. The hose shall maintain or increase component temperature from the proportioner. Longer heated hose lengths may be required depending upon distance from the proportioning unit to the reclamation site.

D. APPLICATION GUN

The application gun shall be capable of mixing plural components in the proper ratio at the minimum acceptable output of four pounds per minute. The gun shall be a Gusmer AR mechanically self-cleaning design, or equivalent.

E. PREPACKAGED, PRE-PROPORTIONED PUF KITS

PUF products consisting of factory prepared kits that are designed to combine and dispense pre-measured quantities of components in the proper ratios may be used in place of an onsite proportioning unit and application gun, with the approval of OWNER. One such product is the foam closure bag manufactured by Foam Concepts Inc. (see Part 2.01.J below). PUF kits shall be used according to the manufacturer's specifications.

F. CEMENT PLUG

Concrete for the cement plug shall have a minimum compressive strength of 3,000 psi in 28 days. The concrete shall be proportioned in accordance with ACI 211. The type of cement used shall be Portland, Type II (ASTM C150). Air entrainment shall be furnished in all concrete. Air content shall be 5%± 1%. Water/cement (W/C) ratio is approximately 0.49 with minimum cement content of 564 lbs/CY. Concrete mixed at the jobsite shall be in accordance with ACI 301, chapter 7. Ready mix concrete shall be in accordance with ASTM C94.

G. FILTER CLOTH

The filter cloth, either woven or non-woven at the CONTRACTOR's option, shall have a minimum thickness of 15 mil in accordance with ASTM D-1777 and a minimum permeability of 10^{-2} cm/sec, such as Fibertex 150® manufactured by Crown Zellerbach or equivalent approved by OWNER. Prior to installation, the CONTRACTOR shall provide the OWNER with documentation that the filter cloth furnished meets the chemical, physical and manufacturing requirements of this Section.

H. VENTILATION/DRAIN PIPE

The ventilation/drain pipe shall consist of 2-inch diameter steel pipe.

I. RANDOM FILL MATERIAL

Random fill material shall consist of native, on-site soils and sandstone rock. The types of miscellaneous fill material to be used shall be approved by the OWNER prior to initiating the work.

J. SUPPLIERS OF PUF

Potential suppliers of polyurethane foam (PUF) are:

Foam Concepts, Inc.
P.O. Box 323
Aurora, Minnesota 55705
(888) 744-7584
(218) 229-3520
E-mail: info@foam-concepts.com
Website: www.foam-concepts.com

Progressive Marketing Group
1906 Highway 71 North
P.O. Box 860
Okoboji, Iowa 51355
(712) 332-9013
(800) 373-2593
(712) 332-9653 FAX
(800) 398-2762 FAX
(800) 806-1171 Dennis Gustafson
E-mail: pmgroup@rconnect.com
Vendor of Equipmentless Foam Sealant™

Utah Foam Products
Ernest Wilson Co.
3609 South 700 West
Salt Lake City, Utah 84119
Contact: Dennis Beckstead
(801) 269-0600 Utah Foam Products
(801) 265-9444 Ernest Wilson Co.
(801) 269-0620 FAX
E-mail: info@utahfoam.com
UFP is a supplier of raw materials. EWC is the contracting arm of the company.

Ron Walker
Azco Construction
2055 West US Highway 50 East
Penrose, Colorado 81240-9575
(719) 372-6872
General contractor with PUF equipment

A Urethane Service and Supply
2200 West 2300 South
West Valley City, Utah 84119
(801) 974-0995
(801) 974-3058 FAX
E-mail: urethane@qwest.net
Roofing contractor

T&W Wilson Spray Urethane
7200 South 2700 West
West Jordan, Utah 84084
Contact: Terry Wilson
(801) 566-1020
(801) 566-6620 FAX
Roofing contractor

Mine Seal, LLC
P.O. Box 231329
Las Vegas, NV 89123
(888) 732-5783
(888) 531-6883 FAX
Mine Closure Consulting Firm
www.mine-seal.com

Most roofing contractors that apply PUF roofing should be capable of providing the appropriate product for mine closure use.

These names are provided for the convenience of bidders. Other vendors may exist. The Utah Abandoned Mine Reclamation Program does not endorse or warrant the reliability or product of any of these vendors.

PART 3 - SAFETY

3.01 MATERIALS

A. Materials shall be stored per the manufacturer's specifications. All safety precautions outlined

by the Polyurethane Division of the Society of Plastics Industries, NFPA, OSHA, EPA and the manufacturer's Material Safety Data Sheets (MSDS) shall be observed. MSDS and technical data sheets shall be on-site and available at all times.

B. There shall be no welding, smoking or open flame within 100 feet of PUF application. A minimum 15-pound, class ABC fire extinguisher must be on site at the mine opening where the PUF is being applied during foam application.

C. Oxygen Content of Working Area

1. A flame safety lamp or oxygen meter must be used to test air before and during installation of the bottom forms. The flame safety lamp or oxygen meter will be supplied by the CONTRACTOR and operated only by the Certified Person. Refer to Section 0250, Part 1.04.

2. Oxygen Meter. The oxygen meter shall be a National Mine Service (NMS) OX231 oxygen meter or equivalent. The oxygen meter shall continuously monitor oxygen levels and have an audible warning. If the oxygen content falls below 19%, all personnel must withdraw from the working area in the mine until the oxygen content increases to safe levels.

3. Flame Safety Lamp. The flame safety lamp shall be lowered to the intended level of the bottom form from the surface. If the flame safety lamp is extinguished upon withdrawal then the mine may not be entered until the oxygen level increases. The flame safety lamp shall accompany the bottom form installer during the time in the mine. If the quality and/or intensity of the flame decreases, then the installer must withdraw from the working area until the oxygen content increases.

4. Any remedy for increasing oxygen content of the working area and/or providing ventilation from the surface must be determined in consultation with the OWNER and the Certified Person.

3.02 HANDLING

PUF shall be applied by workers wearing organic respirator masks and safety glasses or goggles. State or Federal regulations requiring additional equipment shall supersede these specifications.

3.03 TRANSPORT

The CONTRACTOR shall follow all applicable State and local regulations for transport and use of PUF and chemicals required for cleanup. The CONTRACTOR shall also obtain any necessary permits for transportation. The CONTRACTOR shall be aware of agencies and jurisdictions requiring notification in the event of a component leak or spill. In the event of a leak or spill, the CONTRACTOR shall notify the appropriate parties.

PART 4 - EXECUTION

4.01 SHAFT CLOSURE INSTALLATION

A. CLEARING DEBRIS

Clear debris other than fixed, attached or permanent structures from the shaft before PUF is installed *as directed by the OWNER*. Historic structural features shall be preserved and maintained. Any historic debris removed shall be placed neatly to the side of the opening.

B. FORMWORK

1. The formwork shall be installed below the surface of the shaft at the bottom of the foam depth level. The depth of foam required to plug a shaft shall be determined by the following formulas, where *"a"* is the smaller dimension of a rectangular shaft opening and *"b"* is the larger dimension, with both *"a*" and *"b"* measured in feet:

   a. for shafts where $a = b$, the depth of foam should be: $2a$.

   b. for shafts where $a < b < 3a$, the depth of foam should be: $2a + ½(b-a)$

   c. for shafts where $b > 3a$, the depth of foam should be: $3a$.

2. Cross-member supports may be placed at an angle not more than 20 degrees from horizontal as long as both ends are seated in the shaft. The bottom form shall be set over the cross-members.

3. Bottom forms shall be completed prior to application of any polyurethane foam. The installed depth to bottom form shall be indicated on the as-built drawings for polyurethane foam closures. Any breach in the bottom form caused by vandals or rock fall shall be repaired prior to arrival of PUF applicators at that site. The CONTRACTOR is responsible for the integrity of the bottom form, and the loss of any polyurethane should it fail.

C. VENTILATION/DRAIN PIPE

1. The ventilation/drain pipe shall be placed over a portion of the bottom form unobstructed by cross-members. The ventilation/drain pipe shall be open to the shaft after installation of the foam. The ventilation/drain pipe shall be supported by a tripod or other load-bearing device such that the load is not placed on the bottom form.

2. The 2-inch steel ventilation/drain pipe shall be installed into the approximate center of the PUF installation and shall extend vertically to the lines and grades as shown on the Standard Drawings.

3. The steel ventilation/drain pipe shall extend up through the entire PUF and concrete plug installation to provide ventilation and a watercourse through the entire structure. The 2-inch steel pipe shall be cut off level at the top of the concrete plug.

D. POLYURETHANE FOAM (PUF)

1. PUF shall be applied in lifts with a maximum rise of 1.5 feet. Installed PUF lifts shall pass through the tack free stage before applying the next lift. At no time shall sprayed or poured PUF cut into rising foam. The PUF shall be applied in such a manner that the entire void is filled, and that shadow zones or voids are not created during PUF application, and does not raise the temperature to unsafe levels. At the discretion of the OWNER, thermocouples may be used to monitor exothermic generation. PUF application shall cease if heating or off-ratio foam is observed. The CONTRACTOR shall remedy off-ratio foam and demonstrate proper quality PUF to the OWNER before application resumes. See Part 5 below for characteristics of off-ratio foam.

2. The surface of the void to be filled shall be as free as possible of grease and standing water. PUF shall not be applied to surfaces with running water. Remedial action for such situations shall be specified by the OWNER. Polyurethane foam shall not be applied directly to a

debris plug, but must be applied to a bottom form of known physical and chemical properties. PUF shall not be applied during rain unless the foam is protected from interaction with water by a physical barrier.

3. If off-ratio PUF is observed, the applicator must stop, correct the imbalance and continue application with the proper ratio PUF. Correction and determination of the foam ratio shall be done on a plastic sheet away from the work area. Any lift of off-ratio PUF comprising over two percent (2%) of the intended PUF column height shall be removed. An amount of off-ratio PUF less than two percent (2%) of the specified volume may remain if allowed to cool, and if the outer perimeter of off-ratio foam is removed.

4. The CONTRACTOR shall be responsible for any lost or damaged equipment. In addition, damages or claims arising from PUF overspray shall be the responsibility of the CONTRACTOR. Under no circumstances shall foreign material be placed in the PUF unless specifically authorized by the OWNER. Non-PUF materials must be non-toxic, non-hazardous and not compromise the strength or water saturation characteristics of the PUF.

5. Upon reaching the specified grade as shown on the Standard Drawings, the CONTRACTOR shall clean up PUF operations and wait a minimum of one hour before initiating construction of the concrete plug.

E. CONCRETE PLUG

1. The concrete plug shall be placed directly on top of the polyurethane foam (PUF) as shown on the Standard Drawings and be one foot thick, covering the entire width of the opening. There shall be complete contact along the entire perimeter of the plug with the opening walls.

2. The CONTRACTOR shall determine the means of concrete plug placement and submit it to the OWNER for approval prior to the start of construction.

3. The top of the concrete plug shall be reasonably smooth and completed to provide drainage to the 2-inch steel ventilation/drain pipe.

4. Placement of backfill on top of the concrete plug will not be allowed until the structure has cured for a minimum of 24 hours.

F. FILTER CLOTH

1. The geotextile filter cloth shall be placed in all required structures in a manner acceptable to the OWNER.

2. Fabric shall be rejected at the time of installation if it has defects, rips, holes, flaws, deterioration or damage incurred during manufacture, transportation or storage. Fabric damaged before or during the installation shall be replaced at the CONTRACTOR's expense.

3. The fabric shall be placed without stretching and shall lie smoothly in contact with the concrete plug surface. Each strip shall be continuous in width with no joints. The fabric shall be placed with overlapping seams perpendicular to the long axis of the opening. When end overlapping of strips is necessary, the joints shall be overlapped a minimum of two feet. End overlaps shall be made in the direction of the long axis of the opening. The work shall be scheduled so that not more than one day elapses between the placement of the fabric

and the time it is covered with the specified material.

4. The filter cloth shall be installed over the top of the concrete plug and 2-inch PVC ventilation/drain pipe so that free drainage is possible.

G. RANDOM FILL MATERIAL

1. Random fill material shall consist of on-site, native materials as approved by the OWNER. Fill material shall be placed to the thickness shown on the Standard Drawings.

2. Materials for random fill material shall be placed by methods to produce a uniform mass. The first two-foot lift shall be placed by hand or bucket to lower the velocity of impact against the concrete plug. The final surface of the backfilled opening shall be mounded a minimum of one foot above the original ground. Care should be taken not to plug the drain pipe with fill material.

H. SITE CLEAN-UP

All construction-generated trash and debris, such as scrap materials and spilled PUF or concrete, shall be cleaned up and removed. CONTRACTOR shall avoid spraying foam at undesignated targets. Improperly applied PUF and overspray shall be removed.

I. MODIFIED PUF CLOSURE (TYPE B— RECESSED SURFACED)

The standard PUF closure design is modified for shafts designated as historically significant. For these openings, the top surface of the random fill material shall be recessed inside the shaft opening to within three feet of the adjacent ground surface. The minimum thickness of the random fill layer shall be two feet. The positions of the bottom form, PUF, and concrete are lowered accordingly. The intent of the recessed fill is to maintain the original appearance of the opening while still eliminating a serious fall hazard. Shafts designated as historically significant and requiring a recessed closure are listed*** in Section 0300: Specific Site Requirements and/or the appendices.

4.02 ADIT PUF CLOSURE INSTALLATION

A. CLEARING DEBRIS

Clear debris other than fixed, attached, or permanent structures from the adit before PUF is installed *as directed by the OWNER.* Historic structural features shall be preserved and maintained. Any historic debris removed shall be placed neatly to the side of the opening.

B. FORMWORK

1. The formwork shall be installed inby the brow of the adit to allow for a minimum foam thickness of two feet.

2. Cross-member supports may be placed at an angle not more than 20 degrees from vertical as long as both ends are seated in the adit.

3. Forms shall be completed prior to application of any polyurethane foam. The installed depth to form shall be indicated on the as-built drawing for polyurethane foam closures. Any breach in the form caused by vandals or rock fall shall be repaired prior to arrival of PUF applicators at that site. The CONTRACTOR is responsible for the integrity of the form, and

the loss of any polyurethane should it fail.

C. VENTILATION/DRAIN PIPE

Designated openings shall require the installation of a drainage pipe. The drainpipe shall be located near the base of the closure within 15 inches of the intersection of the floor material in the approximate center of the closure or near a low spot along the base. The drainpipe shall extend through the base of the closure. The drainpipe shall protrude a minimum of 12 inches on either side of the seal and shall be made from 6-inch nominal diameter steel pipe. The inside end of the pipe shall be firmly supported by block or natural stone. Both the inside and outside ends of the pipe shall be clear of any obstructions which would impair or restrict flow. Both ends of the pipe shall be covered with a protective screen mesh. Gravel shall be installed over the ends of the pipes to protect the pipe from roof falls and plugging. Gravel shall form a drain and cover the top of the pipe with a minimum of 8 inches of material. The gravel drain shall be no less than 18 inches wide and shall extend to and from the end of the pipes a minimum of two feet. Gravel used in the drain channels shall be selected material ranging from 3/4 to 6 inch in size. CONTRACTOR shall extend a drainage channel away from the bulkhead if it is situated such that water could impound near the base.

D. POLYURETHANE FOAM (PUF)

1. PUF shall be applied in lifts with a maximum rise of 1.5 feet. Installed PUF lifts shall pass through the tack-free stage before applying the next lift. At no time shall sprayed or poured PUF cut into rising foam. The PUF shall be applied in such a manner that the entire void is filled, and that shadow zones or voids are not created during PUF application, and does not raise the temperature to unsafe levels. At the discretion of the OWNER, thermocouples may be used to monitor exothermic generation. PUF application shall cease if heating or off-ratio foam is observed. The CONTRACTOR shall remedy off-ratio foam and demonstrate proper quality PUF to the OWNER before application resumes. See Part 5 below for characteristics of off-ratio foam.

2. The surface of the void to be filled shall be as free as possible of grease and standing water. PUF shall not be applied to surfaces with running water. Remedial action for such situations shall be specified by the OWNER. Polyurethane foam shall not be applied directly to a debris plug, but must be applied to a form of known physical and chemical properties. PUF shall not be applied during rain unless the foam is protected from interaction with water by a physical barrier.

3. If off-ratio PUF is observed, the applicator must stop, correct the imbalance, and continue application with the proper ratio PUF. Correction and determination of the foam ratio shall be done on a plastic sheet away from the work area. Any lift of off-ratio PUF comprising over two percent (2%) of the intended PUF column height shall be removed. An amount of off-ratio PUF less than two percent (2%) of the specified volume may remain if allowed to cool, and if the outer perimeter of off-ratio foam is removed.

4. The CONTRACTOR shall be responsible for any lost or damaged equipment. In addition, damages or claims arising from PUF overspray shall be the responsibility of the CONTRACTOR. Under no circumstances shall foreign material be placed in the PUF unless specifically authorized by the OWNER. Non-PUF materials must be non-toxic, non-hazardous and not compromise the strength or water saturation characteristics of the PUF.

5. Upon reaching the specified grade as shown on the Standard Drawing, the CONTRACTOR shall clean up PUF operations and wait a minimum of one hour before initiating construction

of the concrete plug.

E. RANDOM FILL MATERIAL

1. Random fill material shall consist of on-site, native materials as approved by the OWNER. Fill material shall be placed to a minimum thickness of three feet.

2. Materials for random fill material shall be placed by methods to produce a uniform mass. The material may be placed by hand or equipment. The final surface of the backfilled opening shall be graded to blend with the surrounding contour.

F. SITE CLEAN-UP

All construction-generated trash and debris, such as scrap materials and spilled PUF shall be cleaned up and removed. CONTRACTOR shall avoid spraying foam at undesignated targets. Improperly applied PUF and overspray shall be removed.

PART 5 - FIELD QUALITY CONTROL

INSPECTIONS

A. Periodic checks of the quality of PUF applied shall be made by the OWNER. The main check on quality will be visual. Acceptable PUF shall be tan-white to buff in color with no vesicles and a smooth to coarse orange peel surface. Any one of the following conditions shall cause PUF application to cease, and efforts to correct the off-ratio condition begin.

CONDITION	POSSIBLE CAUSE
Dark PUF Color Smooth and Glassy Friable or Brittle PUF Improper Density	Excess A Component
Light to White in Color Bad Cell Structure Mottled Appearance Blowholes or Pinholes	Excess B Component
Slow rise Poor Cell Structure Frequent Equipment Clogging Slow Curing Bad Physical Properties	Bad Material

B. At any time during PUF application, the OWNER may call for a density test. The applicator shall fill a container provided by the OWNER for this purpose, and the sample will be tested for density. The density of the sample shall be within eight percent (8%) of the nominal 2 pounds per cubic foot density, with a minimum installed density of 1.85 pounds per cubic foot. Density tests indicating PUF installed is not within the minimum specified density shall cause corrective action resulting in PUF within the acceptable nominal range, less deviation due to barometric pressure changes from STP (Standard Temperature and Pressure).

C. Density tests of PUF shall be conducted at no cost to the OWNER. At the discretion of the OWNER, density tests showing PUF in the acceptable range may be taken in the center of the cavity to which PUF is being applied. A sampling box constructed of sheet aluminum and lined

with polyethylene may be lowered into the cavity to take a representative sample of PUF just above the level of installed polyurethane.

PART 6 - MEASUREMENT AND PAYMENT

6.01 SPECIAL CONSIDERATIONS

A. The CONTRACTOR's attention is specifically directed to the following.

B. The final quantities for the major categorizations of materials may vary from the quantities shown on the site-specific summary sheets in Appendix B**. The quantities estimated are based on information gathered and interpreted from surface investigations.

C. The boundaries of classified materials, along with the volumes are estimates and intended to serve as a guide in outlining the scope of work and evaluating the bids.

6.02 QUANTITY MEASUREMENTS

A. Polyurethane foam closures will be paid for at the contract Bid Price per each closure completed. Payment at the Bid Price shall be full compensation for furnishing, placing all materials, including all labor, equipment, tool, and incidentals necessary to complete closure installation in accordance with the Standard Drawings and Specifications.

B. Installation of PUF, fabrication of the concrete plug, placement of filter cloth and ventilation/drain pipes, backfill, revegetation, and cleanup will not be measured for direct payment but will be considered subsidiary to PUF closures.

C. No payment shall be made for off-ratio PUF.

END OF SECTION 0254

0270 Site Grading/Earthwork

PART 1 - GENERAL

1.01 WORK INCLUDED

This section covers the WORK necessary for general earthwork and site grading. The principal items of WORK include, but are not limited to, grading and/or burial of mine dumps, placement of soil material over mine dumps, transportation and placement of mine dump material, installation of riprap ditches and placement of soil materials.

1.02 SUBMITTALS

A. CONTRACTOR shall submit *with the bid proposal* a list of equipment to be used to complete this section of the WORK.

B. CONTRACTOR shall submit *with the bid proposal* locations of borrow areas for fill and topsoil for the approval of the OWNER when such areas are not shown on the Drawings.

1.03 RELATED WORK

A. Section 0250: Mine Closures
B. Section 0290: Revegetation
C. Section 0300: Specific Site Requirements

1.04 PROTECTION

CONTRACTOR shall conduct grading and earthwork operations in a fashion to minimize erosion during and after construction. This shall include limiting disturbance of existing vegetation, working equipment parallel to contours, use of temporary drainage control where appropriate, and other practices as directed by the OWNER. Drainage and irrigation ditches shall be kept clear.

PART 2 - PRODUCTS

MATERIAL DEFINITIONS

A. VEGETATION

Naturally occurring plant growth including: trees, shrubs, grasses, weeds, sagebrush, etc.

B. TOPSOIL

Mineral soils, with organic matter, free of large roots, rocks, debris, and large weeds, obtained from the areas and to the maximum depths specified on the Drawings.

C. SUBSOIL

Mineral soils, free of organic matter and excessive amounts of construction debris and rubble, naturally or artificially (fill) occurring between topsoil and bedrock, including rocks and boulders.

D. MINE DUMP MATERIAL

Material produced in the process of mining, generally found on the site in waste piles and spread over subsoils and fill in thin veneers. The dump material typically consists of overburden materials, ore and fines, and intermixed subsoils. Material size ranges from silts and sands to rock greater than 18 inches in diameter.

E. RANDOM FILL

Artificially placed material consisting of mine dump material, excavated subsoils and unclassified materials. Material for use as random fill shall be free of wood, roots, weeds, construction debris, and other combustible materials. Random fill shall not contain material sizes or gradations which preclude compaction.

F. UNCLASSIFIED EXCAVATION

As described by these Specifications, excavation is unclassified and includes in-situ soils as well as buried rubble and construction debris. It is not the intent of these Specifications to require the excavation of bedrock. Should bedrock be encountered, the OWNER shall be immediately notified so that field adjustments to the reclamation contours as shown in the Drawings can be made.

G. SOIL/ROCK FILL

Locally available material consisting of organic-free rock and coarse soils. Materials for use as soil/rock fill shall be designated on site by the OWNER.

PART 3 - EXECUTION

3.01 STRIP VEGETATION

WORK shall consist of removing vegetation, roots, and surficial debris from areas of reclamation as directed by the OWNER. The resulting debris shall be disposed of off-site, or may be buried on-site in an area approved by the OWNER. However, in no case may combustible materials be buried or otherwise placed in coal refuse.

3.02 SITE GRADING

A. GENERAL

The intent of this WORK is to develop the reclaimed contours shown in the Drawings and to establish favorable drainage conditions and erosion protection at all sites. Random fill shall be placed directly to meet the specified reclamation surface contours. Lines and grades as defined on the Drawings are subject to modification, dependent on the field conditions encountered. Unless identified on the Drawings or Specifications, the lower limit of excavation shall be the top of competent bedrock. The steepest allowable slope of reclaimed areas shall be 3:1, unless otherwise stated in these Specifications or shown on the Drawings. Site grading shall be performed to provide a reclamation area which blends well with natural conditions in adjacent areas.

B. DRAINAGE GRADING

1. At the location of each mine opening, CONTRACTOR shall grade the existing topography to allow surface water to drain freely away from the mine closure. Efforts shall be made to minimize the extent of this grading and limit the disturbance of existing vegetation.

2. Regraded surfaces for waste dump reclamation, burial of mine dump material, and reshaping of drainage channels shall be sloped to drain freely and shall include water bars, intermediate benches, and other such devices as shown on the Drawings to control

precipitation runoff and prevent erosion.

C. STRIP MINE DUMP MATERIAL TO MINERAL SOILS

In the areas designated on the Drawings, CONTRACTOR shall strip existing mine dump material to sufficient depth to expose natural soils. Refuse from these areas shall be utilized as fill for site grading. Stripping depths shown are approximate only, and all mine dump material present shall be removed from the area. After mine dump material removal, soils within the stripped area shall be regraded to approximate the reclamation contours shown on the Drawings. CONTRACTOR shall not be required to import fill to the stripped area to create the contours shown.

D. EXCAVATION

CONTRACTOR shall excavate to the lines and grades shown on the Drawings or as directed by the OWNER. Excavated materials conforming to the definition of random fill, including subsoils, mine dump material, and unclassified materials, shall be placed directly as fill in designated fill areas. Concrete and other inert materials may be buried at depth greater than 36 inches with the approval of the OWNER. CONTRACTOR shall be responsible for all surveying necessary to perform the WORK and determine pay quantities. CONTRACTOR shall confirm that the survey base used is consistent with the plans provided by the OWNER. The OWNER shall have surveys performed at its discretion for confirmation purposes.

E. FILL

Where fill is required, CONTRACTOR shall use excavated material acceptable as either random fill or soil/rock fill. Rocks and boulders greater than 12 inches in diameter shall be removed for use as riprap, buried in fill in accordance with grading tolerances below, or left on finished grade either singly or in groupings to blend with the natural surroundings. Construction debris may be incorporated in the fill providing such materials are properly broken down and placed in such a manner that no open voids exist. The placement of debris in the fill shall be subject to the approval of the OWNER. The distribution of materials throughout a fill shall be such that there shall be no lenses, pockets, streaks or layers of material differing substantially in texture and gradation from the surrounding material in the fill. Fill materials to be compacted with hauled or self-propelled compactors shall be placed and spread in horizontal lifts not exceeding 24 inches loose measure. Fill materials to be compacted by hand-guided or hand-operated equipment shall be placed and spread in horizontal lifts not exceeding 12 inches loose measure.

F. FILL COMPACTION

Each lift of material placed as fill shall be compacted by a minimum three (3) passes of a compactor exerting a minimum pressure of one hundred (100) pounds per square inch or as specified in Section 0300: Specific Site Requirements. Water shall be used as necessary in the compaction operation for dust control and to achieve the required compaction.

G. GRADING TOLERANCES

1. The reclaimed surface shall be constructed to produce the contours shown on the Drawings within a tolerance of plus or minus one foot. Where field conditions warrant a modification in the grading plan, top of subgrade shall be as directed by the OWNER. The top two feet of the subgrade shall consist only of clean subsoils or ***coal refuse which have been cleaned of cobbles and boulders exceeding twelve (12) inches in diameter.

2. Abrupt changes in grade shall be rounded to provide a pleasant visual effect.

3. Depressed areas shall be graded to prevent ponding or standing water.

H. SCARIFICATION

Scarification or discing shall be completed when the veneer of ***coal refuse is generally less than 6 inches thick. Scarification shall be accomplished with a tractor or bulldozer-hauled scarifier or disc-harrow. Where inaccessibility precludes the use of hauled equipment, scarification shall be completed manually with hoes and mattocks.

I. TOPSOIL PLACEMENT

1. Areas to be covered with topsoil shall be scarified to a minimum depth of 4 inches.

2. Following completion of regrading and earthwork to the contours required by these specifications, designated disturbed areas shall be covered with topsoil placed to a minimum thickness of 12 inches unless otherwise directed by the OWNER. On slopes of 3:1 or flatter, topsoil materials shall be compacted in the same manner as fill material. On slopes steeper than 3:1, the top-soil surface shall be stabilized by means of erosion control blanket, vegetation, riprap, or as otherwise directed by the OWNER. The topsoil shall be obtained only from the borrow areas shown and to the maximum depths specified on the Drawings.

J. DEBRIS BURIAL

Construction debris may be incorporated in fill providing such materials are properly broken down and placed in such a manner that no open voids exist. The placement of debris in fill shall at all times be subject to the approval of the OWNER.

PART 4 - MEASUREMENT AND PAYMENT

4.01 MEASUREMENT

A. Measurement will be based on and compared to the dimensions and quantities identified in the bid sheets, these Specifications and Drawings. The OWNER may request intermediate measurements to determine progress of the WORK.

B. Measurements of cubic yards of Earthwork will be required for each mine site. Such measurement shall be used by the OWNER for comparison with the estimated quantity shown on the bid sheets.

C. CONTRACTOR shall complete surveys before and after any site grading or earthwork as directed by OWNER. Volume of material removed or placed shall be calculated by the average-end-area method based on cross-sections developed from CONTRACTOR'S surveys. The OWNER will have surveys performed at OWNER's discretion for confirmation purposes.

D. Should the CONTRACTOR estimate the cubic yards of materials to be greater than 15% more than the quantities shown in the Bid Schedule, a CHANGE ORDER must be negotiated with the OWNER for ADDITIONAL WORK prior to the CONTRACTOR undertaking ADDITIONAL WORK. Measurement for quantities shall be determined prior to the WORK.

E. When the actual quantity of Site Grading/Earthwork performed as determined by measurement is greater than 15% less than the estimated quantity on the bid sheet, the OWNER will negotiate

a reduction in the BID PRICE by the amount of variance using the UNIT PRICE. This adjustment shall be executed by a CHANGE ORDER.

4.02 PAYMENTS

A. Payment for Site Grading/Earthwork will be for each mine site at the BID PRICE, as modified by any CHANGE ORDERS. Payment shall be authorized by the OWNER only for completed Site Grading/Earthwork. No partial payments shall be made.

B. Payment at the UNIT PRICE for additional quantities of Site Grading/Earthwork will be made for quantities greater than 15 percent in excess of the estimated quantity shown on the bid sheet for a given mine site. Reduction of payment for lesser quantities of Site Grading/Earthwork will also be made by the OWNER for quantities greater than 15% below the estimated quantity shown on the bid sheet for a given mine. Such UNIT PRICE payment will require approval of the OWNER, and will be full compensation for approved additional or reduced Site Grading/Earthwork.

C. Payment for additional topsoil placement at individual sites designated by the OWNER will be at the UNIT PRICE bid. For bidding it will be assumed that additional topsoil can be readily excavated from the designated borrow area with standard earthwork equipment, no access improvement to the area will be required, and the haul distance will not exceed two miles.

END OF SECTION 0270

0280 Drainage Control & Stream Protection

PART 1 - GENERAL

1.01 WORK INCLUDED

A. Drainage control shall be required for a number of applications in the WORK, backfilling subsidence openings, and site grading/earthwork. This section covers the WORK necessary for construction of permanent and temporary drainage control including ditches, water bars, road crossings, stream crossings and energy dissipators.

B. This item also consists of WORK to be performed for protection of the aquatic environment while performing any WORK on site. The specific goal of the item is to limit additional sedimentation of the aquatic environment during construction activities and while vegetation is reestablishing. Streams of primary concern are those listed in the Utah State Health Department's Wastewater Disposal Regulations Part II and those identified by OWNER. Streams of concern in the project area are specified in Section 0300: Specific Site Requirements. For streams of primary concern, any increase in turbidity must be limited to no more than 10 Nephelometric Turbidity Units (NTU) above background conditions when they range from 0 to 100. If background NTU is greater than 100, then maximum allowable increase in turbidity cannot exceed 10 percent.

1.02 SUBMITTALS

A. CONTRACTOR shall submit *with the Bid Proposal* the schedule and plan for implementing drainage control measures and for utilizing riprap, gabion mattress, or a combination of systems in accordance with these Specifications and Drawings. If a combination of systems is planned, specific locations for each item shall be identified. Also included shall be specifications of riprap or gabion mattress fill material if supplied as import, and specifications for gabion mattress to be used.

B. The CONTRACTOR shall submit *with the Bid Proposal* a description of and location of stream protection measures to be used at each site.

C. CONTRACTOR shall submit *with the Bid Proposal* the location of borrow areas intended for riprap unless otherwise specified in Section 0300: Specific Site Requirements, or the Drawings.

D. CONTRACTOR shall submit *with the Bid Proposal* the specifications for materials and installation if either culverts or bridges are proposed for use.

1.03 RELATED WORK

A. Section 0230: Access Improvement
B. Section 0240: Demolition and Clean-up
C. Section 0270: Site Grading/Earthwork
D. Section 0280: Drainage Control and Stream Protection
E. Section 0290: Revegetation
F. Section 0300: Specific Site Requirements

1.04 PROTECTION

A. CONTRACTOR shall conduct the WORK in a manner to minimize disturbance of existing trees and vegetation.

B. CONTRACTOR shall conduct the WORK in a manner not to increase surface erosion due to

alteration of natural drainage patterns.

PART 2 - PRODUCTS

2.01 DEFINITIONS

The terms Random Fill, Topsoil, and Coal Refuse shall be as defined in Section 0270: Site Grading/Earthwork.

2.02 RIPRAP

Riprap shall be rock that is dense, sound, and resistant to abrasion and shall be free from cracks, seams, and other defects that would tend to unduly increase its destruction by water and frost actions. The rock shall be solid, angular or sub-angular fragments of quarry stone. Round, riverbed-type rock is not acceptable. Neither breadth nor thickness of a single stone shall be less than one-third its length. The unit weight of stone shall be no less than 155 pounds per cubic foot. Rocks susceptible to solution and disintegration upon contact with standing or flowing water shall not be used as riprap.

Riprap shall be reasonably well-graded with rock diameters specified below, or as specified in Section 0300 or on the Drawings:

Rock Size	Percent Finer by Weight
2 inch	15 percent (D15)
12 inch	50 percent (D50)
15 inch	100 percent (D100)

The thickness of the riprap should be at least as large as the largest diameter stone in the riprap.

2.03 GRAVEL FILTER BLANKET

A. Materials used for the underlining gravel filter for riprap and culverts shall be clean gravel composed of hard, durable stone and shall be free of fine sand, silt, or clay.

B. The allowable particle size shall be between 0.8 and 2.0 inches. Alternative gradations shall be only at the OWNER'S approval.

2.04 GEOTEXTILE FILTER BLANKET

Geotextile fabric used in the lining of drainage channels as a filter blanket beneath riprap shall consist of Mirafi 500X or equivalent (such as DuPont Typar 3401, Polyfelt TS800, or Trevira 1135).

2.05 IN-STREAM FABRIC CHECK DAM

Fabric check dams shall consist of Mirafi 140N, UV resistant fabric or equivalent supported with 6 inch x 6 inch mesh (or smaller) fence anchored into the stream bottom with steel posts.

2.06 SILT FENCE

Silt fences shall consist of Mirafi 500X, UV resistant fabric or equivalent supported with steel fence posts and/or 6 inch mesh fence.

2.07 WATER BARS

Water bars shall be elongated mounds of compacted soil constructed at an angle with respect to the slope of the terrain so that runoff is conveyed away from disturbed areas thereby alleviating rill and gully erosion.

2.08 STRAW BALE CHECK DAMS

Straw bale check dams shall consist of straw bales supported with steel stakes (T-posts, rebar, mine roof bolts). Wooden stakes are not acceptable as they tend to rot and do not penetrate stony ground well.

PART 3 - EXECUTION

3.01 GENERAL

A. All earthwork associated with construction of drainage control shall be in accordance with Section 0270: Site Grading/Earthwork.

B. Wherever possible the CONTRACTOR shall install permanent drainage prior to the initiation of earthwork to minimize the need for temporary drainages.

C. Two types of stream protection structures shall be used: in-stream check dams and silt fences between construction areas and streams.

3.02 TEMPORARY DRAINAGE DITCHES

A. Prior to the initiation of earthwork, the CONTRACTOR shall effect temporary drainage control in the form of swales or ditches upgradient of WORK areas to minimize erosion during construction. Such drainage will be constructed with minimum disturbance to existing vegetation, and upon completion of work shall be graded to blend with surrounding contours and revegetated per Section 0290: Revegetation.

B. On inclined surfaces, temporary access roads shall be cut or crowned to slope in toward the hillside at a grade of not less than 2 percent. At the intersection of the inside edge of the access road with the slope, a shallow ditch shall be formed. Water bars shall be installed across the access road and roadside ditch. If the WORK is scheduled during wet weather, a catch basin and culvert shall be constructed at the base of the access road as directed by OWNER.

3.03 FABRIC CHECK DAMS

A. In-stream fabric check dams, when approved by OWNER, shall consist of at least three sets of dams constructed immediately downstream from temporary stream crossings and major construction activities adjacent to streams. Spacing of the fabric dams shall be designated by OWNER. The bottom of the fabric of the dam shall be anchored with rock. For added stability, the top of the dam can be anchored onto a pole laid horizontally across the stream. Holes should be cut approximately 6 inches long with a knife at the approximate normal water level to allow flow of water through the dam. Fabric check dams shall be placed with the approval of the OWNER at locations on the watercourse that maximize sediment settling between dams.

B. CONTRACTOR shall install dams before any other WORK begins on site including access improvement. CONTRACTOR shall inspect dams at least every other day and after every storm

and clean them when necessary to the approval of the OWNER. Sediments pulled from behind the dams shall be disposed of in a designated fill area and not on the streambank. Fabric shall be replaced when necessary to maintain the integrity of the dam.

3.04 SILT FENCES

A. Silt fence fabric shall be supported either on minimum 6 inch mesh hog wire fence anchored with steel posts spaced no more than six feet apart or with steel fence posts alone spaced no more than three feet apart. At least 12 inches of the lower edge of the fabric shall be securely anchored with rocks or buried with soil material. The fabric shall be attached with at least four wire ties to the posts. In situations where the silt fence will be in use past the construction season, the wire fence backing shall be used. In all cases, guy wire shall be used to support the fabric top. The height of the silt fence shall be no more than three feet high. About 9 to 12 inches of the fabric shall be draped over the top of the wire fence and fastened to fence posts with wire. On slopes of disturbed areas, distances between lengths of silt fences shall not exceed 100 feet. With the approval of the OWNER, silt fences may be positioned to take advantage of natural drainage at sites in order to minimize the length of the fence.

B. At the discretion of the OWNER, the fences shall be maintained for one year after all construction activity has been completed at each site. The CONTRACTOR shall maintain fences until final demobilization from the project area. After demobilization, the OWNER will be responsible for maintenance and removal.

3.05 STRAW BALE CHECK DAMS

A. Straw bale check dams shall be installed as required in ditches and swales to provide temporary erosion control.

B. Straw bale check dams consist of a series of straw bales placed end to end and anchored with stakes. The bales should be placed on their sides so that the straw fibers are vertical and the binder twine is not in contact with the ground. The bales should be keyed into a shallow (4-6 inches deep) trench so that there is no gap between the bales and the ground surface. The excavated soil from the trench should be banked against the upslope side of the bales for an additional seal. Adjacent bales should be placed tightly together and anchored with at least two stakes per bale to prevent the bales from turning. Loose straw shall be stuffed between bales to fill any gaps.

C. Straw bale check dams should extend far enough to each side from the center of the ditch so that the elevations of the bases of the end bales are higher than the top of the center bale (that is, so impounded water overflows at the center of the dam instead of at the ends).

D. Rotted, silt-clogged, or broken bales should be replaced as necessary. The CONTRACTOR shall maintain straw bale check dams until final demobilization from the project area. After demobilization, the OWNER will be responsible for maintenance and removal.

3.06 TEMPORARY DRAINAGE CROSSINGS (LOW WATER CROSSINGS)

A. Temporary crossings shall be designated on a site?specific basis depending on stream classification, time of year intended for use, the frequency and duration of use, discharge of stream and number of vehicles to cross. The design of such crossings shall at all times be subject to the approval of the OWNER.

B. In the drainages, the preferred crossing shall consist of the placement of 6 to 9 inch nominal size clean rock in the channel to facilitate equipment access. The clean gravel shall be placed only

to the extent necessary to provide a stable base for equipment crossing. Alternative temporary crossings shall be made only with the approval of the OWNER. These may include the construction of temporary bridges and culverts. In areas where access improvement is not required, stream crossings shall be made only with the approval of the OWNER.

C. All crossings will be installed after required dams and fences are in place and in accordance with Section 0280, Part 3.03 and 3.04. Temporary bridge and culvert crossings must be removed as soon as possible after the construction activity is complete. Gravel crossings shall be left in place.

3.07 PERMANENT DRAINAGE CONTROL

A. Ditches shall be constructed at the locations and to the dimensions shown on the Drawings.

B. Where ditches cross areas of coal refuse, the bottom and sides shall be covered with a minimum of 24 inches of compacted soil.

C. Place riprap or gabion mattresses in the locations and to the dimensions shown on the Drawings.

3.08 GEOTEXTILE FILTER BLANKET PLACEMENT

The geotextile fabric filter blanket shall be placed in the incised channel commencing at the downstream end and working upstream using care not to stretch or tear the material. At least a foot of the fabric shall be keyed into the sideslopes near the top of the channel and covered with soil. In channels where the width of the fabric material is less than the channel itself, the fabric must be overlapped in the channel bottom at least two feet. In addition, end lengths of the fabric shall be also overlapped at least two feet. Care shall be exercised in the placement of gravel or riprap on the surface of the fabric to prevent tearing.

3.09 GRAVEL FILTER BLANKET PLACEMENT

The gravel filter blanket shall be placed in the incised channel beneath all riprap and gabion materials as directed by the OWNER. The gravel shall be placed in one operation using methods that will not cause segregation of particle sizes. The surface of the finished layer should be reasonably even and free from mounds and windrows. The gravel need not be compacted in place, but shall be placed in such a manner as will result in uniform layers of material for riprap of the specified thickness.

3.10 RIPRAP PLACEMENT

A. Before riprap is placed, the surface to be covered shall be fully compacted and graded to the required slope as shown on the Drawings. Cut-off trenches shall be excavated to the dimensions shown on the Drawings.

B. Geotextile fabric filter and/or gravel filter blanket shall be placed to the dimensions shown on the Drawings.

C. Riprap shall be placed directly on the filter blanket in the locations and to the contours shown on the Drawings. Riprap placement shall be done in a manner which will produce a reasonably well-graded mass of stone with the minimum practicable percentage of voids. The entire mass of stone should be placed in conformance with the lines, grades, and thickness shown on the Drawings. The riprap should be placed to its full course thickness at one operation and in such

a way a manner as to avoid displacing the underlying material. Care should be exercised to prevent mixture of embankment and riprap materials.

D. Riprap should typically be placed by end dumping to prevent segregation by sizes. It should be dumped from a vertical height of no more than 5 feet and should never be pushed downhill with a dozer, placed in layers, or conveyed down a chute as these operations cause segregation of particles. Where riprap is placed directly on filter fabric, the dump height should be no more than 3 feet to prevent tearing of fabric. Torn fabric shall be replaced with proper overlap as required.

E. The large stones should be well distributed and the entire mass of stone should conform to the gradation specified. The riprap should be placed and distributed so that there will be no large accumulations of either the larger or smaller sizes of stone.

F. Some roughness of the surface is acceptable and desirable, but the mass should be fairly compact with all sizes of material placed in their proper proportions. Hand placing or rearranging of individual stones by equipment may be required to achieve the results specified.

3.11 WATER BARS

A. CONTRACTOR shall construct water bars on temporary access roads, in water courses, and at such other locations as shown on the Drawings or as directed by the OWNER.

B. Water bars shall be constructed perpendicular to the gradient in order to deflect surface runoff toward catchments and drainage ditches or to otherwise reduce the velocity of runoff below the erosion threshold.

C. Water bars shall consist of gravel-filled trenches excavated to a depth of 12 inches and a minimum width of 18 inches. The trenches shall be backfilled 4 to 6 inches above adjacent site grade. The surface of water bars on access roads shall be as directed by the OWNER.

D. Unless otherwise specified, water bars shall be spaced at intervals of not more than 500 feet on slopes that are flatter than 15:1 (horizontal:vertical) and 300 feet on slopes between 15:1 and 10:1. On steeper slopes, the spacing of water bars shall be as directed by the OWNER.

PART 4 - MEASUREMENT AND PAYMENT

4.01 MEASUREMENT

A. Measurement will be based on and compared to the dimensions and quantities identified in the Bid Schedule, these Specifications and Drawings for each mine site. The OWNER may require the CONTRACTOR to provide measurements to determine progress and completion of the WORK.

B. Measurements shall be required for a given mine site for cubic yards of riprap or bedding, square yards of geotextile fabric filter blanket, or lineal feet of ditch, streambank riprap, or fencing. Such measurement will be used by the OWNER for comparison with the estimated quantities shown on the Bid Schedule.

C. Should the CONTRACTOR estimate the quantity of materials to be greater than 15% more than the quantities shown in the Bid Schedule, a CHANGE ORDER must be negotiated with the OWNER for ADDITIONAL WORK prior to the CONTRACTOR undertaking ADDITIONAL WORK. Measurement for quantities shall be determined prior to the WORK.

D. When the actual quantity of Drainage Control performed as determined by measurement is greater than 15% less than the estimated quantity on the bid sheet, the OWNER will negotiate a reduction in the BID PRICE by the amount of variance using the UNIT PRICE. This adjustment shall be executed by a CHANGE ORDER.

4.02 PAYMENT

A. Payment for Drainage Control will be for each mine site at the BID PRICE, as modified by any CHANGE ORDERS. Payment shall be authorized by the OWNER only for completed Drainage Control. No partial payments will be made.

B. Payment at the UNIT PRICE for additional quantities of Drainage Control will be made at the approval of the OWNER for quantities greater than 15 percent in excess of the estimated quantity shown on the bid sheet for a given mine site. Reduction of payment for lesser quantities of Drainage Control will also be made by the OWNER for quantities greater than 15% below the estimated quantity shown on the bid sheet for a given mine. Such UNIT PRICE payment shall be full compensation for approved additional Drainage Control.

END OF SECTION 0280

0290 Revegetation

PART 1 - GENERAL

1.01 WORK INCLUDED

The WORK consists of revegetation of the disturbed areas, including areas disturbed by the WORK. Revegetation shall include:

A. Site preparation
B. Seedbed preparation
C. Topsoil placement as required
D. Seeding
E. Mulching
F. Erosion control netting
G. Seedling and cutting planting

1.02 SUBMITTALS

A. CONTRACTOR shall submit *with the bid proposal* the names of one seed supplier, and alternate, to be used for the seed mixtures required by these specifications.

B. CONTRACTOR shall submit *with the bid proposal* a written description indicating equipment to be used to perform the work required in this section.

C. CONTRACTOR shall submit *during construction* empty container labels, tags, and receipts for mulch material and seed for verification of materials being used.

D. CONTRACTOR shall submit, if mulch is specified, *during construction and prior to applying mulch* the Phytosanitary Certificate required by the Utah Department of Agriculture.

1.03 RELATED WORK

A. Section 0230: Access Improvement
B. Section 0250: Mine Closures
C. Section 0270: Site Grading/Earthwork
D. Section 0300: Specific Site Requirements

1.04 DELIVERY, STORAGE, AND HANDLING

A. CONTRACTOR shall deliver seed in original containers showing analysis of seed mixture, percentage of pure live seed (PLS), year of production, net weight, date of packaging and location of packaging. Seed must be stored under dark, cool, and dry conditions. Damaged packages are not acceptable.

B. Erosion control netting shall be stored out of direct sunlight.

PART 2 - PRODUCTS

2.01 PLANT MATERIALS

A. A combination of plant materials that may include seed, seedlings, containerized stock, and cuttings shall be used in revegetation. The use of the plant materials shall be in accordance with Section 0300: Specific Site Requirements and as shown on the Drawings.

B. CONTRACTOR shall make a concerted effort to obtain all components of the plant materials mixture. Seed and nursery sources may require greater than six weeks notice to obtain specific species. More than one source may be required to furnish all seed or plant varieties. If all sources have been exhausted, or if available seed or stock of a given species is of unacceptable quality, that species may be deleted or another species substituted. Any changes in the seed mixture shall require the written approval of the OWNER prior to execution of the contract.

C. CONTRACTOR must submit name of company and alternate that will supply seed, see Section 1.02. A.

2.02 SEED

A. The species composition and planting rates of the seed mixtures to be used are specified in Appendix A. Unless specified otherwise, seeding rates given are for broadcast seeding.

B. All seed mixes shall be fresh, clean, new crop seed.

2.03 SEEDLINGS

A. Seedlings include containerized stock, tubelings, and bare root stock obtained from nurseries. The species composition and planting rates of the seedlings to be used are specified in Appendix A.

B. Seedlings must be healthy and vigorous and not desiccated at time of planting. OWNER reserves the right to refuse payment for decadent plants.

C. Bare root stock shall have roots that are not withered, dry, or partially dead due to improper transport and/or storage by the CONTRACTOR. All bare root stock shall be stored and delivered with roots in a damp medium.

2.04 DORMANT PLANT MATERIALS

A. Dormant plant materials will be used for riparian area revegetation. Dormant plant materials include cuttings of live logs, twigs, or whips from wild tree stock.

B. CONTRACTOR shall obtain dormant materials only from areas identified by the OWNER, and the OWNER shall approve and accept or reject the individual material cut. CONTRACTOR shall cut plant materials just prior to the breaking of dormancy, usually late March to early April. As dormancy is partially a function of temperature, cutting and planting of the materials may be required at a moment's notice (dependent on spring weather) to ensure material is planted while still in a dormant state.

C. CONTRACTOR shall be responsible for all rooting hormones, sealants, paints, and shock-reducing vitamins.

D. All dormant vegetative plant materials shall be alive and dormant and not dried or otherwise damaged. Payment will not be made for substandard plant material, as determined by OWNER.

E. Dormant plant materials shall consist of the following species planted at the indicated spacing, unless otherwise specified in Section 0300: Specific Site Requirements:

Common Name	Scientific Name	Spacing
Cottonwood	*Populus fremontii* (or) *Populus angustifolia*	1 every 20 feet
Endemic Willow	*Salix* spp.	2 rows on 3-foot centers - offset

2.05 MULCH

A. Mulch, when required, shall consist of native hay or straw free of noxious weeds or any foreign material detrimental to plant life. *Alfalfa will not be permitted.*

B. Mulch must meet the requirements of the Utah Noxious Weed Act (4-17-3, UCA; Regulation A700-04-09) and the Utah Phytosanitation Act. Mulch must be tested and found clean by an official Utah Department of Agriculture Inspector. CONTRACTOR shall contact the state inspector and arrange testing. Payment will not be made without certificate of inspection from Agricultural Inspector. Untested mulch may be used only with the prior written approval of the OWNER.

C. Hay used as mulch may be old, but it shall be dry and not moldy.

2.06 EROSION CONTROL BLANKET

A. Uniform, open weave, erosion control blanket which combines mat of seasoned wood excelsior of consistent thickness with photodegradable plastic mesh (AMXCO Curlex Blankets or equivalent) shall be used on slopes of 2h:1v or greater. The blanket shall be used in combination with straw mulch on sites where slope, soil texture, drainage pattern, or exposure will lead to excessive soil loss from erosion.

B. Staples for installation of erosion control blanket shall be made of wire (diameter 0.091 inches or greater), U-shaped with 6-inch legs and 1-inch groin. Size and gauge of staples may vary with soil conditions.

2.07 TOPSOIL

A. Topsoil shall be as defined in Section 0270: Site Grading/Earthwork.

PART 3 - EXECUTION

3.01 GENERAL

A. Areas to be revegetated are all those which have been disturbed during reclamation construction. Those areas shall include, but are not limited to, portal closure areas, subsidence areas, grading areas, access routes, staging areas, and other areas disturbed by CONTRACTOR in performing the WORK.

B. CONTRACTOR shall take necessary precautions to avoid disturbance of surrounding native areas and will not travel on previously undisturbed soil, unless directed by OWNER.

C. When machinery is specified, all operations will be conducted along the contour. On level sites (area permitting) all equipment operations shall be conducted perpendicular to the prevailing wind direction when wind erosion potential is considered to be high.

3.02 SITE PREPARATION

A. CONTRACTOR shall remove and bury foreign materials and debris collected during topsoil spreading. Tree stumps and large shrubs may also be removed, buried, or stockpiled for distribution on the site following top-soiling, as specified in Section 0300 or as directed by OWNER.

B. Areas that are not fill areas with imported topsoil shall be chiseled or ripped to a depth of 12 inches. This particularly applies to areas that have soils compacted from construction activities and includes haul roads and site access roads. Ripping shall be repeated until the compacted area is loose and friable.

C. Areas of fill to be covered with imported topsoil shall be chiseled or ripped to a depth of 12 inches. Ripping of fill materials shall be completed by a bulldozer equipped with single or a twin set of ripper shanks. Ripping shall be done on 4-foot centers to a depth of 12 inches and shall follow final grading and precede seedbed material (topsoil) application. Ripping shall be completed at a speed which maximizes ripper shank action and promotes soil material disruption to the specified depth. Ripping shall be repeated until the compacted area is loose and friable.

D. Topsoil shall be placed on fill areas immediately following ripping to a minimum depth of 24 inches, or other minimum depth as specified in Sections 0270 or 0300, in all areas designated by the OWNER.

3.03 MULCHING

A. All sites not designated for erosion control blanket shall be mulched unless otherwise specified by the OWNER in Section 0300: Specific Site Requirements.

B. Mulching shall be performed AFTER topsoil is in place, and PRIOR to seeding. Mulch shall be spread by hand or mechanical blower, in an even manner, at a rate of 2,000 pounds per acre over the site to be mulched. Mulch application shall be initiated at the top of the slope, working downhill, where possible.

C. Mulch shall be crimped with hand tools where equipment cannot gain access or where soil surface roughness (see Part 3.05 below) is already adequate following topsoil distribution and further equipment activity would level the surface.

3.04 SEEDBED PREPARATION/SURFACE ROUGHENING

A. AFTER topsoil placement and mulching, and PRIOR to seeding, the ground surface shall be roughened and gouged to create hummocks and depressions with up to 12 inches of relief. This relief will reduce ground surface wind disturbance and create water catchment basins. Roughening can be achieved by gouging with a backhoe or excavator bucket. Surface roughness can also be created during topsoil distribution by leaving intact the mounds and windrows from each dump truck or loader bucket dump. Furrows, basins, and ridges created by

the roughening should run predominantly along the contour to minimize runoff. The roughening process should incorporate the mulch into the top of the soil and some will be buried; however, care should be taken to minimize the mulch buried at depth. CONTRACTOR shall exhibit caution during the gouging and roughening process to ensure that subsurface ***coal refuse is not uncovered or brought up to the surface.

B. Boulders, both large and small, may be left on site after topsoiling and prior to seeding, either singly or in groupings to blend with the natural surroundings, as directed by OWNER. OWNER may require that additional boulders be placed on site prior to seeding to enhance visual variation and provide wildlife habitat.

C. Seedbed preparation shall be considered to be complete when the soil surface is completely roughened.

D. Unless the soil is severely compacted, seedbed preparation shall not be required for discontinuous, isolated areas of disturbance less than 0.05 acres (approximately 2500 square feet or 50 feet by 50 feet), such as areas around mine portal closures.

3.05 SEEDING

A. All seeding shall be broadcasting as directed by OWNER. When broadcast seeding, passes shall be made over the site to be seeded such that even distribution of seed shall be obtained. Broadcast seeding shall take place immediately following the completion of final seedbed preparation. Broadcast seeding shall not be conducted when wind velocities would prohibit even seed distribution. Broadcast seeding shall be followed by hand raking, manual use of a drag chain, or sweeping with sturdy tree or shrub branches to cover seed. This shall be done over the entire site but will not be so extreme as to reduce the extent of soil relief.

B. Broadcast seeding of large areas shall be done using hand-operated "cyclone-type" mechanical seeders. All seeding equipment used shall be equipped with a metering device and set to the appropriate seeding rate.

C. Broadcast seeding of small areas of disturbance less than 0.05 acres (approximately 2500 square feet or 50' x 50') may be done by hand scattering. Raking of small areas is not necessary if there is sufficient surface roughness to ensure that seeds will fall into crevices and other micro-topographic depressions so that weather and gravity will cause them to be covered and stay in place.

D. After completion of the broadcast seeding and seed covering, organic debris such as logs, tree stumps, and grubbed vegetation shall be randomly redistributed across the sites. This shall be done at the OWNER's direction for the purpose of creating visual variation and production of wildlife habitat. Care shall be exhibited to avoid leveling the soil surface.

3.06 SEEDLING PLANTING

A. Planting of bare-root and/or containerized plant seedling stock, when required, shall occur following ground surface roughening. No seedling planting shall be attempted in frozen seedbed material. Seedling spacing shall be as stated in the Section 0300 revegetation plans. Seedling stock shall be delivered to the planting site as close to the time of planting as possible.

B. At each individual planting site, a circular area (planting circle) shall be cleared of mulch materials or inhibiting debris. The size of the circle shall be approximately 12 inches in diameter. The receiving hole shall then be dug with the depth of the hole extending 2 to 4 inches deeper than necessary for planting. The hole shall be of sufficient size to allow

positioning the seedling and tamping the backfill. After the hole has been formed, it shall be partially backfilled with loose soil to allow planting at the proper depth. The seedling shall then be placed in the hole and the hole ½ backfilled. The hole shall then be filled with water and the remainder of the seedbed material backfilled into the hole as rapidly as possible without displacing water from the hole. The backfill shall be firmly tamped around the seedling. Planting depth shall not exceed the depth at which the seedling was grown in the container.

C. A basin, which slopes gently from the outside of the planting circle to the seedling stem, shall be formed in the soil to aid in water catchment. The basin shall be mulched with straw (or the mulch replaced when a seedling is planted into a mulched site) and the straw anchored with gravel and seedbed material. Planting holes may be dug by hand or with a power auger. Planting shall be completed randomly over the disturbed area in clumps, as specified in Section 0300.

3.07 WILLOW CUTTINGS

A. Willow Cuttings shall be planted along the borders of water courses as designated in Section 0300: Specific Site Requirements. Cuttings shall be gathered and planted in the spring (April or May) of the year.

B. Cuttings shall be collected from locally occurring, dormant plants free from disease. All cuttings shall be of stem material and be approximately two (2) to six (6) feet long. Stem material, 2 to 4 years old at the maximum, shall be considered acceptable for use. The basal cut shall be made at an angle immediately below a node. Cuttings shall be planted immediately after collection, keeping the cuttings moist throughout the process. Should storage be necessary, cuttings shall be placed in a plastic bag with a wet paper towel or cloth wrapped around the bases to prevent desiccation.

C. To complete the planting procedure, the base end of the cutting shall be pushed into a prepared seedbed such that 1 to 2 feet of cutting remains above the seedbed surface. The base *must* be in contact with the water table. A metal bar may need to be pounded into the soil to develop a pathway for the willow cutting to follow. The base end shall be dipped into a solution of "Rootone F" prior to planting to aid in root formation.

3.08 DORMANT LOG PLANTING

A. OWNER shall be responsible for locating and securing the necessary permits for obtaining dormant log materials. OWNER shall also identify and tag all materials to be cut, and be on site during the cutting process. CONTRACTOR shall be responsible for cutting, transporting, and handling dormant plant material; site preparation for planting; application of all rooting hormones, transplant shock reducers, paints, and sealers; and placing the plants into the ground at the locations specified in Section 0300.

B. Dormant logs may be a mix of Narrowleaf Cottonwood, *Populus angustifolia*, and Fremont Cottonwood, *Populus fremontii*. All logs shall be alive and dormant, and not dried or otherwise damaged. All logs shall be between 2 and 6 inches in diameter at the base, and 6 to 18 feet in length. All dormant logs shall be cut at an angle at the base (rooting) end and flat at the top (vegetative) end. The bottom two feet of the log shall be scored with an ax to expose the cambium layer (see drawing). Side limbs will be removed from the logs and all exposed cuts including the top saw cut shall be sealed with an accepted tree paint.

C. Holes for dormant logs shall be augured to a depth that reaches into the water table. Planting areas adjacent to streams and rivers may be composed entirely of river rock, or closely packed,

competent rock. Auguring through this material into the water table may be extremely difficult. An auger with a chisel bit operating off of a power take off (PTO), some other drilling rig, or a backhoe with a narrow bucket may be necessary. Dormant logs shall be planted in holes that barely accommodate the diameter of the logs. If larger holes are necessary because of digging conditions, the excess volume shall be carefully backfilled under the direction of the OWNER. Dormant log spacing shall be as stated in Section 0300. Planting shall occur in the spring (March, April, or May) of the year.

D. CONTRACTOR shall make every effort to minimize damage to vegetation and environmental disturbance at the tree source area. Unused or excess brush, branch trimmings, logs, etc. shall be disposed of properly. CONTRACTOR shall leave the site neat and in a condition acceptable to OWNER and the landowner.

3.09 EROSION CONTROL BLANKET

A. The area to be covered shall be properly prepared and seeded prior to application of erosion control blanket. All roads and debris shall be removed prior to seeding and installation.

B. Seeded slopes shall be covered with excelsior-type erosion control blanket where shown on the Drawings.

C. CONTRACTOR shall roll blanket down over slopes without stretching or pulling and lay blanket smoothly on soil surface, burying and securing the top end of each section in a narrow (6-inch) trench. CONTRACTOR shall leave 12 inches overlap from top roll over bottom roll and four inches overlap over adjacent section. The blanket shall be placed with the netting on top and the fibers in contact with the soil over the entire area.

D. The staples shall be installed per erosion control netting manufacturer's recommendations and spaced over the blanket on no less than 6-foot intervals. Outside edges and overlaps shall be at 36-inch intervals.

E. CONTRACTOR shall lightly dress slopes (manually) with topsoil and cobbles to ensure close contact between blanket and soil.

PART 4 - MEASUREMENT AND PAYMENT

4.01 MEASUREMENT

A. Measurement will be based on and compared to the quantities identified in the bid sheets, these Specifications and Drawings for each mine site. The OWNER will request intermediate measurements to determine progress of the WORK.

B. Measurements by CONTRACTOR will be required for a given mine site for acres of revegetation and/or square yards of erosion control blanket. Such measurements will be used by the OWNER for comparison with the estimated quantities shown on the bid sheets.

C. Should the CONTRACTOR estimate the quantity of materials to be greater than 15% more than the quantities shown in the Bid Schedule, a CHANGE ORDER must be negotiated with the OWNER for ADDITIONAL WORK prior to the CONTRACTOR undertaking ADDITIONAL WORK. Measurement for quantities shall be determined prior to the WORK.

D. When the actual quantity of Revegetation performed as determined by measurement is greater than 15% less than the estimated quantity on the bid sheet, the OWNER will negotiate a reduction in the BID PRICE by the amount of variance using the UNIT PRICE. This adjustment

shall be executed by a CHANGE ORDER.

4.02 PAYMENTS

A. Payment for Revegetation will be for each mine site at the BID PRICE, as modified by any CHANGE ORDERS. No partial payments will be made.

B. Payment at the UNIT PRICE for additional quantities of Revegetation will be made for quantities greater than 15 percent in excess of the estimated quantity shown on the bid sheet for a given mine site. Reduction of payment for lesser quantities of Revegetation will also be made by the OWNER for quantities greater than 15% below the estimated quantity shown on the bid sheet for a given mine. Such unit price payment will require approval of the OWNER, and will be full compensation for additional or reduced revegetation and/or erosion control blanket.

C. Payment will not be made without:

1. Seed: seed testing certification, certification to be submitted with invoice, and

2. Mulch [only if specified]: Phytosanitary Certificate for certification of compliance with the Utah Noxious Weed Act. Certification shall be submitted with invoice.

END OF SECTION 0290

White Oak Mine Project

0300 Specific Site Requirements (Gray Pages)

PART 1 – GENERAL
PART 2 - SPECIAL TERMS AND CONDITIONS
PART 3 - EXECUTION
PART 4 – MINE SITE DESCRIPTIONS AND SPECIFIED CLOSURES

LOCATIONS AND WORK DESCRIPTIONS

AREAS 1 THROUGH 18

Section 300

SPECIFIC SITE REQUIREMENTS

PART 1 - GENERAL

1.01 WORK INCLUDED

A. This section describes the location, the features present, and the WORK to be performed at the White Oak Mine Project located in Carbon County, Utah. The items of the WORK shall be performed according to the appropriate sections of these specifications.

B. It is the intent of these Specifications that the site-specific scope of WORK is as described in this Section. The General Technical Specifications, Sections 0200 through 0290, outline WORK broadly applicable to all abandoned mine reclamation situations and that may not be required at each mine site in this project. Where there is a conflict between Section 0300 and the General Technical Specifications (0200's), Section 0300 shall govern.

C. The access, site description and specific requirements for each area are described in this Section. Details and dimensions are shown on the drawings in Appendix E. CONTRACTOR shall be aware that the dimensions on the Drawings are shown as typical. CONTRACTOR shall also be aware that minimum or maximum dimensions on the Drawings or given in the Specifications are specific and are to be adhered to unless the OWNER approves changes in writing. The quantities presented in the specific site sections should be considered an estimate with a tolerance of plus or minus 15 percent. CONTRACTOR shall visit each site and determine the quantities and amounts required in performing the WORK as intended in these Specifications and on the Drawings.

1.02 PROJECT LOCATION AND DESCRIPTION

A. The White Oak Mine Project area consists of 15 areas to be graded, two areas of French drains, one stream realignment, one riprap ditch, installation of one perforated corrugated metal pipe (cmp), and revegetation of the disturbed areas. Mine openings previously sealed may need resealing. The openings occur in a wide range of sizes, configurations, and conditions.

B. Access: Access to the project area is south of the town of Scofield on SR 96 2.8 miles, then west on SR 264 (Eccles Canyon) 1.3 miles. Turn south into Whisky Canyon 1.0 miles to mine site.

C. The formal project boundary takes in the following sections: SW ¼ Sec. 19 and NW ¼ Sec. 30, T.13 S., R.7 E., SLBM.

D. The White Oak Mine Project is mapped on the Scofield USGS 7.5 minute quadrangle.

1.03 MINE SITE LOCATIONS AND DESCRIPTIONS

A. The White Oak Mine Project area consists of 18 areas to be regraded, combined areas of general roughening, one drainage to be rip-rapped, one drainage to be restored, two French drain areas to be installed, one perforated pipe installation, removal of guard railing, miscellaneous debris clean-up and revegetation of the entire mine site. There are approximately five abandoned mine openings that have previously been closed. The openings occur in a wide range of sizes, configurations, and conditions.

B. Locations, descriptions, approximate dimensions, and map references of each mine area are provided in the table in Appendix B, Earthwork Schedule. Detailed locations of the sites are presented on the maps in Appendix D. Note that mine symbols may be plotted on the maps offset slightly from their true locations due to terrain interference with GPS surveys and the way the mapping software treats adit symbols.

1.04 PROJECT SITE GROUPINGS

A. The White Oak Mine Project has been organized into eighteen areas based on geographical proximity and access considerations. These subareas are the basis for the area detail maps in Appendix D and the subareas in the Bid Schedule and Appendix B. The eighteen subareas are: 1 through 14 requiring cut/ fill earthwork, subarea 14 requiring stream restoration, subarea 15 general roughening before revegetation, subarea 16 regrading of diversion ditch, subarea 17 cmp drain pipe and subarea 18 side drainage riprap ditch. The descriptions that follow give dimensions and quantities of material to be regraded.

B. Area 1: [fill area]
Area 1 is located at the southern extent of the project area as shown on Map Sheet D2. Area 1 is a pit area where a substation was located the pit area is approximately 0.4 acres with a volume of approximately 3,000 cubic yards.

C. Area 2: [cut area]
Area 2 is located at the southern extent of the project area along the main drainage course as shown on Map Sheet D2. Area 21 is a cut area consisting of a covered culvert crossing. The area is approximately 0.2 acres with a volume of approximately 500 cubic yards.

D. Area 3: [cut/fill area]
Area 3 is located on the southwestern slope of the project area as shown on Map Sheet D2. Area 3 has been regraded by a previous contractor and requires additional grading. The area is approximately 1.2 acres with a volume of approximately 3,624 cubic yards.

E. Area 4: [cut/fill area]
Area 4 is located on the north slope of the project area as shown on Map Sheet D2. Coal outcrops near the top of the area in four areas. Area 4 has been regraded by a previous contractor and requires additional grading. The area is approximately 0.9 acres with a volume of approximately 4,886 cubic yards.

F. Area 5: [cut/fill area w/French drain]
Area 5 is located on the western slope of the project area as shown on Map Sheet D2. Area 5 has been regraded by a previous contractor and requires additional grading. A seep is located near the top of the area. The slope is presently failing due to saturation. The area is approximately 1.6 acres with a volume of approximately 325 cubic yards.

G. Area 6: [cut/fill area]
Area 6 is located at the south-center area along the main drainage alignment of the project area as shown on Map Sheet D2. Area 6 is level to slightly mounded area along the main drainage alignment. The area is approximately 1.1 acres with a volume of approximately 12,876 cubic yards.

H. Area 7: [cut/fill area w/French drain]
Area 7 is centrally located low on the on the south slope of the project area as shown on Map Sheet D2. Area 7 is the access road to Area 8. A seep is located midway up the roadway along the outcrop. The seep is flowing down the inside edge of the roadway. The area is approximately 0.3 acres with a volume of approximately 3,192 cubic yards.

I. Area 8: [cut/fill area]
Area 8 is centrally located on the south slope above the drainage to the tree line as shown on Map Sheet D2. Area 8 has been regraded by a previous contractor and requires additional grading. A large highwall remains at this area. The area is approximately 4.0 acres with a volume of approximately

199,954 cubic yards.

J. Area 9: [cut/fill area – top cover]
Area 9 is located in the center of the site along the main drainage as shown on Map Sheet D2. Area 9 is a topcover pile forming the pad area for the loadout structure (removed) as shown on Map Sheet D2. The area is approximately 0.7 acres with a volume of approximately 15,618 cubic yards.

K. Area 10: [cut/fill area]
Area 10 is located centrally on the north slope of the drainage as shown on Map Sheet D2. Area 10 has been regraded by a previous contractor and requires additional grading. A highwall remains in the northwest portion of the area. A temporary access road remains in the area along with coal refuse on the surface. The area is approximately 10.2 acres with a volume of approximately 273,936 cubic yards.

L. Area 11: [cut/fill area]
Area 11 is centrally located along the main drainage as shown on Map Sheet D2. Area 11 is a pit area on the south side of the drainage. The area is approximately 1.1 acres with a volume of approximately 23,510 cubic yards.

M. Area 12: [cut/fill area]
Area 12 is located at the northernmost extent of the project area as shown on Map Sheet D2. Area 12 is a sediment pond and associated dike. The area is approximately 4.0 acres with a volume of approximately 125,388 cubic yards.

N. Area 13: [cut/fill area – top cover]
Area 13 is located at the southernmost extent of the project area on the south side of the main drainage as shown on Map Sheet D2. Area 13 is a topcover storage pile. A power pole with three transformers and associated concrete pad are located on the northeast corner of the site. The slope above this area has been revegetated with seedlings. The area is approximately 2.0 acres with a volume of approximately 1,004 cubic yards.

O. Area 14: [cut/fill area – stream channel]
Area 14 is the main stream channel alignment located through the center of the site from top to bottom as area as shown on Map Sheet D2. Area 14 is the realigned and restored drainage channel and associated slopes outside other delineated areas within the project boundary. The area is approximately 4.0 acres with a volume of approximately 70,053 cubic yards.

P. Area 15: [roughening]
Area 15 is the remaining areas between designated areas within the project boundary as shown on Map Sheet D2. Area 15 will require roughening before revegetation is completed. This area will tie the delineated areas together to form a continuous slope and grade on the reclaimed mine site. The area for roughening and revegetation is approximately 7.8 acres.

Q. Area 16: [cut/fill area – diversion ditch]
Area 16 is an existing diversion ditch located above Area 1 as shown on Map Sheet D2. Area 16 extends approximately 800 feet sloping to the center of the diversion with no provision for drainage through the disturbed area downslope. The area is approximately 0.7 acres with a volume of approximately 450 cubic yards.

R. Area 17: [perforated drain pipe]
Area 17 is an eight-inch diameter perforated corrugated metal pipe (cmp) draining a spring system above the disturbed area and terminating in the middle of the previously reclaimed slope. The flow from the drain pipe is approximately one to two cubic feet per minute.

S. Area 18: [side drainage channel]
Area 18 is a small side drainage channel on the south side of the main drainage as area as shown on

Map Sheet D2. The channel is located between Area 3 and Area 8. The length of the drainage is approximately 240 feet long extending from the undisturbed slope to the main stream channel alignment.

1.05 PROJECT AREA ACCESS

A. The project area is served by a poorly maintained paved roadway. High clearance and/or four-wheel-drive vehicles are suggested for travel in most of the project area, particularly in wet weather. CONTRACTOR shall select an onsite staging area and secure all necessary permits.

1.06 LAND STATUS

A. The White Oak Mine Project area contains land owned or controlled by several parties. OWNER is responsible for obtaining the necessary rights of entry to perform the reclamation work.

PART 2 - SPECIAL CONDITIONS AND RESTRICTIONS

2.01 CULTURAL RESOURCE PROTECTION

A. All reclamation activities shall be conducted in a manner sensitive to any historic values and resources found in the area.

B. Access improvement, excavation, and other ground disturbing activities shall be limited to the minimum necessary to achieve the goals of the WORK

C. Removal of historic or prehistoric artifacts or rock specimens is prohibited. This includes, but is not limited to, bottles, bottle fragments, china and glass fragments, tools, tin cans, buckets, pipe, wire, nails, spikes, bolts, track, machinery, ore cars, vehicles, lumber and other wood, arrowheads and other stone tools, ore samples, petrified wood, and fossils.

2.02 LAND PROTECTION

A. Trash, containers, wrappings, empty mortar and concrete mix bags, concrete block fragments, rebar cuttings, welding rod scraps, waste PUF, pallets, water jugs, buckets, broken tools, discarded materials, food wrappers, beverage containers, paper towels, and other such litter generated by the reclamation activities shall be kept contained during construction and shall be cleaned up and removed from the site upon completion.

B. CONTRACTOR shall exercise care with open flames when welding or cutting to avoid starting range fires. CONTRACTOR shall submit a written range fire prevention and fire response plan to OWNER at the start of construction.

C. CONTRACTOR shall be responsible to reimburse landowners or lease holders for livestock or other property lost, injured, or damaged by CONTRACTOR's operations on access roads.

2.03 ACCESS RESTRICTIONS

A. Vehicles shall stay on existing roadways as much as possible.

2.04 WORKER HEALTH AND SAFETY

A. The CONTRACTOR shall comply with all applicable standards of the Mine Safety and Health Administration (MSHA) published in "Safety and Health Standards Applicable to Underground Metal and Nonmetal Mining and Milling Operations" (30 CFR Part 57), in particular sections 57.5037 through

57.5047.

B. Rodents often nest in abandoned mines and leave accumulations of droppings and nest debris. In theory, these nests and droppings could host the potentially lethal Hantavirus, although no mine closure work has ever been linked to a case of Hantavirus. As a precaution, workers should avoid stirring up dust or rodent droppings in mines and use standard hygiene and sanitation practices (washing before eating, etc.). Workers are encouraged to learn to recognize the symptoms of Hantavirus infection and seek proper medical attention if indicated.

C. Standard safety gear (hard hat, steel-toed shoes) are required for all personnel. Fatigue, heat stress, and dehydration are inherent medical risks of summer work. Frostbite and hypothermia are risks of winter work. Workers should take appropriate precautions for the site conditions.

D. CONTRACTOR is required to hold regular safety meetings and is encouraged to have a response plan in place in the event of accidents, personal injury, animal bites, or other medical emergency.

E. All of Carbon County is covered by 911 emergency telephone service, but areas within the project area may not have reliable cell phone coverage.

PART 3 - EXECUTION

3.01 WORK REQUIRED AT ALL SITES

The following WORK shall be performed at the sites:

A. Items specifically identified for demolition shall be demolished and disposed of in accordance with Section 0240, Demolition and Clean-up.

B. Trash and debris created during construction shall be removed and disposed of in accordance with Section 0240, Demolition and Clean-up.

C. The CONTRACTOR shall place all materials containing coal or coal fines as low in the backfill areas as practical. Uncontaminated (non-coal) backfill material shall be stockpiled to use as top cover material when at all possible. It is the intent of the backfilling and grading of pits and highwalls areas to cover coal material with as much as possible with uncontaminated materials. All (soil) materials high in organics shall be placed as the final lifts on fill areas. Site grading and earthwork required shall be performed in accordance with Section 0270, Site Grading/Earthwork.

D. Finished grading of backfill pursuant to Section 0270, Site Grading/Earthwork; and this Section 0300, Specific Site Requirements will be completed prior to completion of the CONTRACT. Revegetation shall be performed in accordance with Section 0290, Revegetation.

E. All areas disturbed will be finished with the extreme roughening technique as described in Section 0290, Revegetation.

F. All areas disturbed will be revegetated. Seeding will be completed as soon as possible after roughening. Tree planting will be completed in the spring. CONTRACTOR shall make allowances for re-mobilization in the spring to complete tree planting. Tree planting is expected to be labor intensive in order to not re-disturb roughened areas. Revegetation shall be performed in accordance with Section 0290, Revegetation.

3.02 CONSTRUCTION SCHEDULING

A. Work Priorities: Because the start of construction is in the fall construction season, it may not be possible to complete all of the WORK before the onset or return of adverse winter weather.

CONTRACTOR shall organize the execution of the WORK into priorities to protect the site prior to demobilization for the winter if necessary.

B. Most of the site reclamation for the White Oak Mine Project is weather dependent. It is conceivable that the project work will be suspended for the winter because of the late season start date. The CONTRACTOR shall account for this potential shutdown within the mobilization/demobilization cost. The mine reclamation project costs quoted on the bid schedule apply for the duration of the reclamation. The start-up date for resumption of WORK suspended due to adverse weather or other conditions will be determined by OWNER in consultation with CONTRACTOR and will depend upon the nature of the uncompleted WORK.

3.03 WORK REQUIRED AT INDIVIDUAL AREA SITES

A. Demolition and clean-up
Work consists of removal of guard rail on mine access road. Approximately 5,000 feet of guard rail is to be removed. No revegetation along the access road is required.

B. Area 1: [fill area]
Area 1 shall be backfilled and regraded as shown on Map Sheet D3. Backfill material will be borrowed from Area 2 and Area 10 to be placed in the pit area. Approximate volume of material to be placed is 3,000 cubic yards. Approximately 0.4 acres will require roughening and revegetation. All site grading and earthwork shall be conducted in accordance with Technical Specification Section 0270 – Site Grading/Earthwork, and as shown on the drawings in Appendix D. All revegetation shall be conducted in accordance with Technical Specification Section 0290 – Revegetation and as described in Appendix A. It is estimated that 0.4 acres will require revegetation.

C. Area 2: [cut area]
Area 2 shall be cut and regraded as shown on Map Sheet D3. Material from the area will be placed in Area 1. Approximate volume of material to be removed is 500 cubic yards. Approximately 0.2 acres will require roughening and revegetation. All site grading and earthwork shall be conducted in accordance with Technical Specification Section 0270 – Site Grading/Earthwork, and as shown on the drawings in Appendix D. All revegetation shall be conducted in accordance with Technical Specification Section 0290 – Revegetation and as described in Appendix A. It is estimated that 0.2 acres will require revegetation.

D. Area 3: [cut/fill area]
Area 3 shall be regraded as shown on Map Sheet D3. Material within the area will be regraded to approximate pre-mining contours. Approximate volume of material to be cut is 747 cubic yards and 2,877 cubic yards of fill. Approximately 1.2 acres will require roughening and revegetation. All site grading and earthwork shall be conducted in accordance with Technical Specification Section 0270 – Site Grading/Earthwork, and as shown on the drawings in Appendix D. All revegetation shall be conducted in accordance with Technical Specification Section 0290 – Revegetation and as described in Appendix A. It is estimated that 1.2 acres will require revegetation.

E. Area 4: [cut/fill area]
Area 4 shall be regraded as shown on Map Sheet D3. Material within the area will be regraded to approximate pre-mining contours. Material will be moved to the west to cover the exposed coal seam. Approximately 2 – 3 feet of material will be placed over the exposed coal seam. Approximate volume of material to be cut is 2,517 cubic yards and 2,369 cubic yards of fill. Approximately 0.9 acres will require roughening and revegetation. All site grading and earthwork shall be conducted in accordance with Technical Specification Section 0270 – Site Grading/Earthwork, and as shown on the drawings in Appendix D. All revegetation shall be conducted in accordance with Technical Specification Section 0290 – Revegetation and as described in Appendix A. It is estimated that 0.9 acres will require revegetation.

F. Area 5: [cut/fill area w/French drain]
Area 5 shall be cut to expose the seeps along the bedrock slope. A French drain will be installed parallel to the slope and extending down the slope to the drainage bottom. The drain will be approximately 130 feet parallel to the slope and 180 feet down the slope. The drain will be 2 feet wide by 2 feet high filled with minus 2-inch durable rock. The lining shall be geotextile filter blanket installed as shown on the drawings. Trench depth for installation of the French drain is estimated to be six feet. Approximately 325 cubic yards of material will be excavated and replaced for installation of the drain. Approximately 310 linear feet of fabric and 46 cubic yards of rock material will be required for the drain. Approximate drain alignment will be as shown on Map Sheet D3. Area 5 will be regraded to approximate pre-mining contours. Approximate volume of material to be cut and filled is 325 cubic yards. Approximately 1.6 acres will require roughening and revegetation. All site grading and earthwork shall be conducted in accordance with Technical Specification Section 0270 – Site Grading/Earthwork, and as shown on the drawings in Appendix D. All drainage construction shall be conducted in accordance with Technical Specification Section 0280 – Drainage Control & Stream Protection, and as shown on the drawings in Appendix D. All revegetation shall be conducted in accordance with Technical Specification Section 0290 – Revegetation and as described in Appendix A. It is estimated that 1.6 acres will require revegetation.

G. Area 6: [cut/fill area]
Area 6 shall be cut to form the new stream channel alignment. The material from Area 6 will be placed in Area 10 to reduce the highwall. Approximate volume of material to be cut is 12,132 cubic yards and 744 cubic yards of fill. Approximately 1.1 acres will require roughening and revegetation. All site grading and earthwork shall be conducted in accordance with Technical Specification Section 0270 – Site Grading/Earthwork, and as shown on the drawings in Appendix D. All revegetation shall be conducted in accordance with Technical Specification Section 0290 – Revegetation and as described in Appendix A. It is estimated that 1.1 acres will require revegetation.

H. Area 7: [cut/fill area w/French drain]
Area 7 shall be backfilled with material from Area 6. A French drain will be installed parallel to the existing cut slope and extending down the slope to the drainage bottom. The drain will be approximately 220 feet parallel to the cut slope. The drain will be 2 feet wide by 2 feet high filled with minus 2-inch durable rock. The lining shall be geotextile filter blanket installed as shown on the drawings. Trench depth for installation of the French drain shall be on the existing slope. Approximately 220 linear feet of fabric and 33 cubic yards of rock material will be required for the drain. Approximate drain alignment will be as shown on Map Sheet D3. Area 7 will be backfilled approximate pre-mining contours. Approximate volume of material to be cut is 333 cubic yards and 2,859 cubic yards of fill. Approximately 0.3 acres will require roughening and revegetation. All site grading and earthwork shall be conducted in accordance with Technical Specification Section 0270 – Site Grading/Earthwork, and as shown on the drawings in Appendix D. All drainage construction shall be conducted in accordance with Technical Specification Section 0280 – Drainage Control & Stream Protection, and as shown on the drawings in Appendix D. All revegetation shall be conducted in accordance with Technical Specification Section 0290 – Revegetation and as described in Appendix A. It is estimated that 0.3 acres will require revegetation.

I. Area 8: [cut/fill area]
Area 8 shall be backfilled with material from Areas 3 through 14 as required. The highwall and slope shall be backfilled as shown on Map Sheet D2. Approximate volume of material to be cut is 57,053 cubic yards and 142,901 cubic yards of fill. Approximately 4.0 acres will require roughening and revegetation. All site grading and earthwork shall be conducted in accordance with Technical Specification Section 0270 – Site Grading/Earthwork, and as shown on the drawings in Appendix D. All revegetation shall be conducted in accordance with Technical Specification Section 0290 – Revegetation and as described in Appendix A. It is estimated that 4.0 acres will require revegetation.

J. Area 9: [cut/fill area – top cover]
Area 9 shall be cut to form the new stream channel alignment. The material from Area 9 will be stockpiled to be used as final lift on areas requiring uncontaminated (non-coal) materials where practical. Approximate volume of material to be cut is 13,456 cubic yards and 2,162 cubic yards of fill. Approximately 0.7 acres will require roughening and revegetation. All site grading and earthwork shall be conducted in accordance with Technical Specification Section 0270 – Site Grading/Earthwork, and as shown on the drawings in Appendix D. All revegetation shall be conducted in accordance with Technical Specification Section 0290 – Revegetation and as described in Appendix A. It is estimated that 0.7 acres will require revegetation.

K. Area 10: [cut/fill area]
Area 10 shall be backfilled with material from Areas 3 through 14 as required. The highwall and slope shall be backfilled as shown on Map Sheet D2. Approximate volume of material to be cut is 136,936 cubic yards and 137,000 cubic yards of fill. Approximately 10.2 acres will require roughening and revegetation. . All site grading and earthwork shall be conducted in accordance with Technical Specification Section 0270 – Site Grading/Earthwork, and as shown on the drawings in Appendix D. All revegetation shall be conducted in accordance with Technical Specification Section 0290 – Revegetation and as described in Appendix A. It is estimated that 10.2 acres will require revegetation.

L. Area 11: [cut/fill area]
Area 11 shall be backfilled with material from Areas 3 through 14 as required. The pit area shall be backfilled as shown on Map Sheet D2. Approximate volume of material to be cut is 11,134 cubic yards and 12,376 cubic yards of fill. Approximately 1.1 acres will require roughening and revegetation. All site grading and earthwork shall be conducted in accordance with Technical Specification Section 0270 – Site Grading/Earthwork, and as shown on the drawings in Appendix D. All revegetation shall be conducted in accordance with Technical Specification Section 0290 – Revegetation and as described in Appendix A. It is estimated that 1.1 acres will require revegetation.

M. Area 12: [cut/fill area]
Area 12 shall be cut to form the new stream channel alignment. The coal material from Area 12 will be placed in Area 11 or Area 10 as practical where a minimum of three feet of cover material can be placed. The cut material will be used as backfill for areas as necessary to approximate pre-mining contours and as shown on Map Sheet D2. Approximate volume of material to be cut is 125,213 cubic yards and 175 cubic yards of fill. Approximately 4.0 acres will require roughening and revegetation. All site grading and earthwork shall be conducted in accordance with Technical Specification Section 0270 – Site Grading/Earthwork, and as shown on the drawings in Appendix D. All revegetation shall be conducted in accordance with Technical Specification Section 0290 – Revegetation and as described in Appendix A. It is estimated that 4.0 acres will require revegetation.

N. Area 13: [cut/fill area – top cover]
Area 13 shall be regraded as shown on Map Sheet D3. Material within the area will be regraded to approximate pre-mining contours. The concrete structure shall be removed and may be disposed off-site or buried onsite within a pit area where a minimum of four feet of material can be placed over the concrete. The power pole and transformers shall be removed from the mine site and disposed at a disposal site approved by the OWNER. Approximate volume of material to be cut is 999 cubic yards and 5 cubic yards of fill. Approximately 2.0 acres will require roughening and revegetation. All site grading and earthwork shall be conducted in accordance with Technical Specification Section 0270 – Site Grading/Earthwork, and as shown on the drawings in Appendix D. All revegetation shall be conducted in accordance with Technical Specification Section 0290 – Revegetation and as described in Appendix A. It is estimated that 2.0 acres will require revegetation.

O. Area 14: [cut/fill area – stream channel]
Area 14 shall be cut to form the new stream channel alignment. Any coal material excavated shall be placed in pit areas as practical where a minimum of three feet of cover material can be placed. The cut

material will be used as backfill for areas as necessary to approximate pre-mining contours and as shown on Map Sheet D3. A riprap channel shall be installed extending down the slope as shown on Map Sheet D3 and on cross-section A-A'. The riprap channel will be approximately 2,100 feet long from the top to bottom of the disturbed area. The channel shall be constructed with a bottom width of ten feet and depth of three feet as shown on Map Sheet D4A. Riprap shall consist of minus 6-inch graded durable rock material. The lining shall be geotextile filter blanket installed as shown on the drawings. Approximately 2,100 linear feet of fabric and 3,970 cubic yards of rock material will be required for the channel. Approximate drain alignment shall be as shown on Map Sheet D3. Approximate volume of material to be cut is 13912 cubic yards and 56,141 cubic yards of fill. Approximately 4.0 acres will require roughening and revegetation. All site grading and earthwork shall be conducted in accordance with Technical Specification Section 0270 – Site Grading/Earthwork, and as shown on the drawings in Appendix D. All drainage construction shall be conducted in accordance with Technical Specification Section 0280 – Drainage Control & Stream Protection, and as shown on the drawings in Appendix D. All revegetation shall be conducted in accordance with Technical Specification Section 0290 – Revegetation and as described in Appendix A. It is estimated that 4.0 acres will require revegetation.

P. Area 15: [roughening]
The combined Area 15 shall be roughened prior to revegetated as shown on the drawings. All revegetation shall be conducted in accordance with Technical Specification Section 0290 – Revegetation and as described in Appendix A. It is estimated that 7.8 acres will require revegetation.

Q. Area 16: [cut/fill area – diversion ditch]
Area 16 shall be regraded as shown on Map Sheet D3. Material within the area will be regraded to approximate pre-mining contours. Approximate length of diversion ditch is 800 feet. Approximate volume of material to be regraded is 535 cubic yards. Approximately 0.3 acres will require roughening and revegetation. All site grading and earthwork shall be conducted in accordance with Technical Specification Section 0270 – Site Grading/Earthwork, and as shown on the drawings in Appendix D. All revegetation shall be conducted in accordance with Technical Specification Section 0290 – Revegetation and as described in Appendix A. It is estimated that 0.3 acres will require revegetation.

R. Area 17: [perforated drain pipe]
An eight-inch diameter perforated cmp shall be installed to connect to the existing drain pipe as shown on Map Sheet D3. The drain will be approximately 340 feet long extending down the slope to the drainage bottom. The perforated cmp shall be buried a minimum of 12-inches deep. Care shall be taken not to damage the drain pipe during roughening and revegetation operations. All drainage construction shall be conducted in accordance with Technical Specification Section 0280 – Drainage Control & Stream Protection, and as shown on the drawings in Appendix D. All revegetation shall be conducted in accordance with Technical Specification Section 0290 – Revegetation and as described in Appendix A.

S. Area 18: [side drainage channel]
A riprap channel shall be installed extending down the slope as shown on Map Sheet D3. The riprap channel will be approximately 240 feet long extending down the slope to the drainage bottom. The channel shall be constructed with a bottom width of five feet and depth of one foot as shown on Map Sheet D4A. Riprap shall consist of minus 6-inch graded durable rock material. The lining shall be geotextile filter blanket installed as shown on the drawings. Approximately 240 linear feet of fabric and 230 cubic yards of rock material will be required for the channel. Approximate drain alignment shall be as shown on Map Sheet D3. All drainage construction shall be conducted in accordance with Technical Specification Section 0280 – Drainage Control & Stream Protection, and as shown on the drawings in Appendix D.

END OF SECTION 0300

White Oak Mine Project

Appendix A: Revegetation Seed Mixture

Appendix A: Revegetation Seed Mixture

Seeds

Seed Mix Species Composition			
Common Name	Scientific name	Preferred Variety	Pounds PLS/Acre*
Bluebunch Wheatgrass	*Pseudoroegneria spicata*		1.0
Western Wheatgrass	*Pascopyrum smithii*		2.0
Slender Wheatgrass	*Elymus trachycaulus ssp trachycalus*		3.0
Mountain Brome	*Bromus marginatus*		2.0
Canby Bluegrass	*Poa canbyi*		0.4
Kentucky Bluegrass	*Poa pratensis*		0.25
Showy Goldeneye	*Heliomeris multiflora*		0.2
White Yarrow	*Acheillea multiflroum*		0.2
Englemann Aster	*Aster englemannii*		0.5
Silky Lupine	*Lupinus sericeus*		2.0
Mountain Big Sagebrush	*Artemisia tridentata ssp vaseyana*		0.3
Mountain Snowberry	*Symphoricarpos oreophilus*		1.0
Creeping Oregon Grape	*Mahonia repens*		1.0
Woods Rose	*Rosa woodsii*		1.0
TOTAL			14.85

*The planting rate indicated (pounds PLS/acre) is for broadcast seeding.

Appendix A: Revegetation Seed Mixture

Bare Root Transplants

South-East Facing Slopes

Common Name (Tree Transplants) Plant trees on South-West facing slopes on 5' to 6' centers in ¼ to ½ acre clumps	Scientific name	Preferred Variety	Number/Acre
Quaking Aspen	*Populus tremuloides*		400
Subtotal Trees/Acre			400

North-West Facing Slopes

Common Name (Tree Transplants) Plant trees on South-West facing slopes on 5' to 6' centers in ¼ to ½ acre clumps	Scientific name	Preferred Variety	Number/Acre
White Fir	*Abies concolor*		200
Sub-alpine Fir	*Abies lasiocarpa*		150
Blue spruce	*Picea Pungens*		200
Subtotal Trees/Acre			550

White Oak Mine Project

Appendix B: Earthwork Schedule

APPENDIX B

EARTHWORK SCHEDULE

Group Name	Ht (ft)	Wd (ft)	Dp (ft)	Removal Volume (Cu Yds) [Cut]	Placement Volume (Cu Yds) [Fill]	Total Feature Volume (Cu Yds)	Roughening/ Revegetation Area (Sq Ft)	Roughening/ Revegetation Area (Acres)	Reclamation Action	Reclamation Method
Area 1	150	130	15		3,000	2,667	17,711	0.4	Fill	Equip
Area 2	30	170	6	500	-	0	9,412	0.2	Cut/Fill	Equip
Area 3	300	250	60	372	2,855	775	54,397	1.2	Cut/Fill	Equip
Area 4	100	430	30	2,517	2,431	489	39,143	0.9	Cut/Fill	Equip
Area 5	140	150	25	325	325	77	67,715	1.6	Cut/Fill	Equip
Area 6	160	350	10	10,046	1,118	68	46,756	1.1	Cut/Fill	Equip
Area 7	50	280	6	130	3,162	1,528	15,189	0.3	Cut/Fill	Equip
Area 8	320	700	60	141	151,140	2,037	175,883	4.0	Cut/Fill	Equip
Area 9	270	170	40	8,527	4,937	900	31,264	0.7	Cut/Fill	Equip
Area 10	870	550	60	88,709	53,177	330	446,280	10.2	Cut/Fill	Equip
Area 11	180	310	25	15,888	14,538	530	47,618	1.1	Cut/Fill	Equip
Area 12	760	270	90	49,429	4,416	222	175,531	4.0	Cut/Fill	Equip
Area 13				84	1,568	3,463	88,265	2.0	Cut/Fill	Equip
Area 14				10,560	57,725	296	172,502	4.0	Cut/Fill	Equip
Area 15				-	-	-	338,650	7.8	Cut/Fill	Equip
Area 16	3	6	800	535	535	535	12,000	0.3	Cut/Fill	Equip
Area 17	2	2	340	50	50	340 feet	-	-	Cut/Fill/Install	Equip
Area 18	1	3	240	-	-	240 feet	-	-	Install	Equip

White Oak Mine Project

Appendix C: Contractor Report Forms

DAILY CONSTRUCTION PROGRESS REPORT

CONTRACTOR PERFORMANCE RATING

AMR/007/934/C

DAILY CONSTRUCTION PROGRESS REPORT
-- CONTRACTOR --

Project: _____ Date:_____ M T W Th F

Crew:_____ Supervisor:_____ Hours:_____ to _____

Equipment:_____

_____ down from _____ to_____ for _____

General description of work performed, equipment/material deliveries, etc:

_____

_____

_____

_____(Attach as-built drawings as required.)

WORK items approved:_____

_____

Problems/delays and proposed or actual resolution. DOGM action required? Yes No

_____

_____

Visitors & purpose:_____

_____

Temp: 20 30 40 50 60 70 80 90 100 Comments:
Sky: fair pc mc cldy ovrcst rain snow
Ground: dry wet muddy snow ____" frozen

Project is approximately ? on schedule Contract expires:

____ days behind schedule ____/____/____

____ days ahead of schedule

Contractor: _____ ____/____/____

Proj Mgr: _____ ____/____/____

AMR Admin: _____ ____/____/____

CONTRACTOR PERFORMANCE RATING

Contractor: _____

Project:_____AMR/***/***/C

Start Date: ___/___/___

End Date: ___/___/___ Duration:_____days

Rating: Satisfactory= 1; Unsatisfactory= 0

_____ 1. Achieved the specified level of project quality and quantity.

_____ 2. Prompt, diligent, and systematic prosecution of work.

_____ 3. Adequate personnel (number and skill level).

_____ 4. Adequate equipment (number, type, and operating condition).

_____ 5. Effective on-site management and supervision of work.

_____ 6. Cooperation, responsiveness, and communication with inspector and project manager.

_____ 7. Cooperation and timely response in negotiation of contract changes.

_____ 8. Cooperation in negotiation of claims.

_____ 9. Record of prompt payment for labor, materials, equipment, and subcontract work.

_____ 10. On-time submission of necessary documents and reports.

_____ 11. Compliance with all applicable federal, state, and local laws and regulations.

_____ 12. Minimized the adverse effect of construction activities on the public and the environment.

_____ 13. Cooperation with landowners and/or utilities.

_____ = **Total** = **Performance Rating**

Attach explanations of all "Unsatisfactory" ratings.

Rated by: _____ Date _____

Reviewed by: _____ Date _____

A contractor with a Performance Rating (or average rating if there is more than one rating) of 9 or less fails to pre-qualify.

0869P-1
7/20/88 Rev 7/25/91

CONTRACTOR PERFORMANCE RATING

Contractor: _____

Project: _____ AMR/***/***/C

Explanations of all "Unsatisfactory" ratings:

Item:

Item:

White Oak Mine Project

Appendix D: Project Location Site Maps

Map Title	
General Location Map	Map Sheet D1 of 5
Current Topography Map	Map Sheet D2 of 5
Design Topography Map	Map Sheet D3 of 5
Cross-Sections A through C	Map Sheet D4a of 5
Cross-Sections D through F	Map Sheet D4b of 5
Cross-Sections G through H	Map Sheet D4c of 5
Channel and Drain Designs	Map Sheet D5 of 5

White Oak Mine Project

Appendix E: Standard Mine Closure Design Drawings

Sheet E1	Adit Backfill Closure
Sheet E2	Shaft Backfill Closure
Sheet E3	Block Wall Closure
Sheet E4	Native Stone Wall Closure
Sheet E5	Wall and Backfill Closure
Sheet E6	Bat Gate Closure
Sheet E7	Bat Gate Closure Details
Sheet E8	Bat Gate With Door Closure
Sheet E9	Bat Gate With Door Closure Details
Sheet E10	CMP Bat Gate Closure
Sheet E11	CMP Bat Gate Closure Details
Sheet E12	CMP/Rebar Closure
Sheet E13	CMP/Rebar Closure Details
Sheet E14	Rebar Shaft Grate Closure
Sheet E15	Rebar Shaft Grate (With I-Beam)
Sheet E16	Rebar Shaft Grate (Pinned)
Sheet E17	Rebar Shaft Grate Grade Beam Details
Sheet E18	One-way Trap Door Closure Details

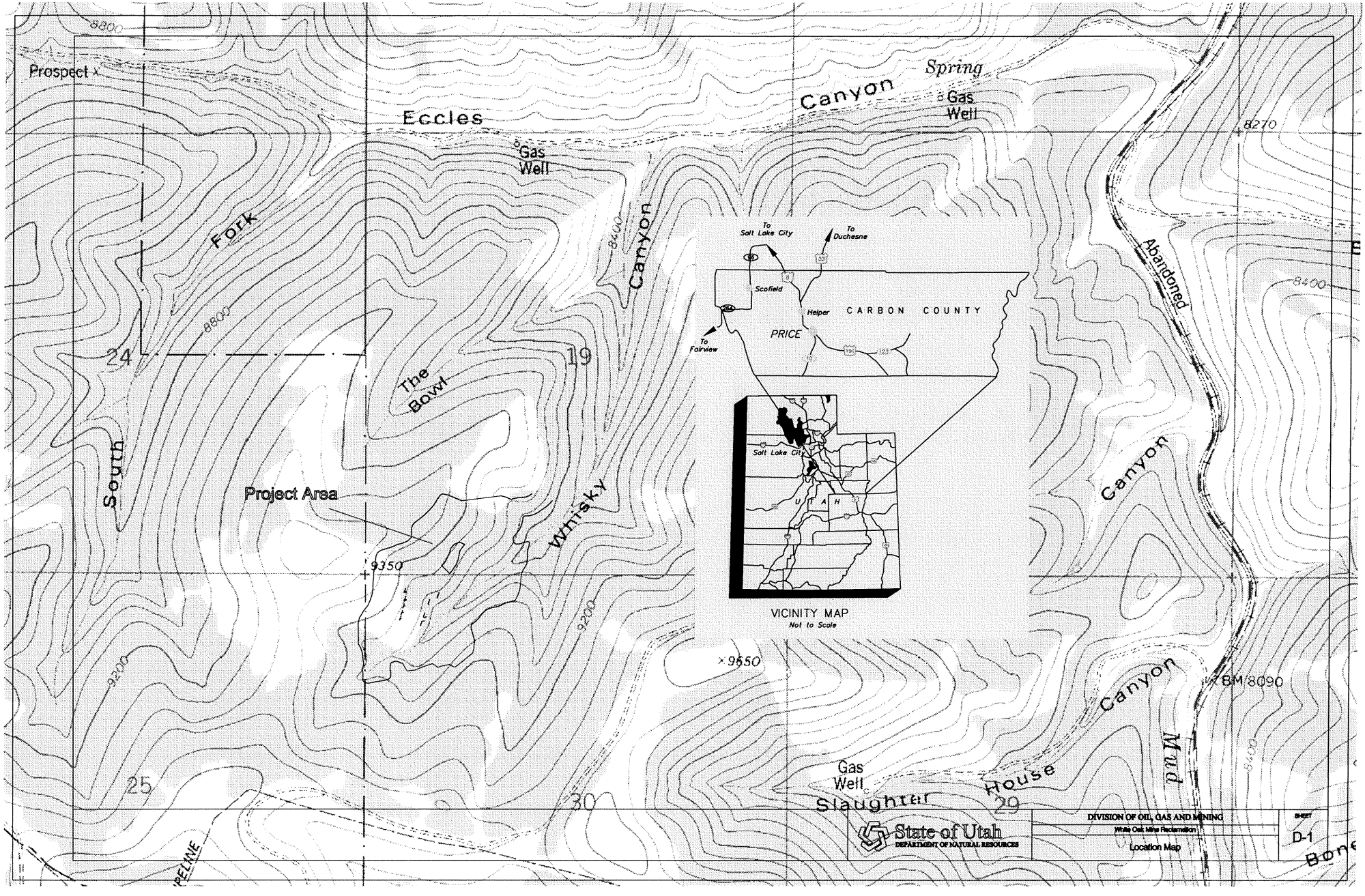
Prospect
Eccles
Canyon
Spring
Gas Well
Gas Well
Fork
South
The Bowl
Project Area
Whisky
Canyon
Abandoned
Canyon
Mud
Canyon
House
Slaughter
Gas Well
24
19
25
30
29
8800
8400
8270
9350
9200
9550
BM 8090
To Salt Lake City
To Duchesne
Scofield
Helper
CARBON COUNTY
PRICE
To Fairview
Salt Lake City
UTAH
VICINITY MAP
Not to Scale
State of Utah
DEPARTMENT OF NATURAL RESOURCES
DIVISION OF OIL, GAS AND MINING
Whisky Oak Mine Reclamation
Location Map
SHEET
D-1

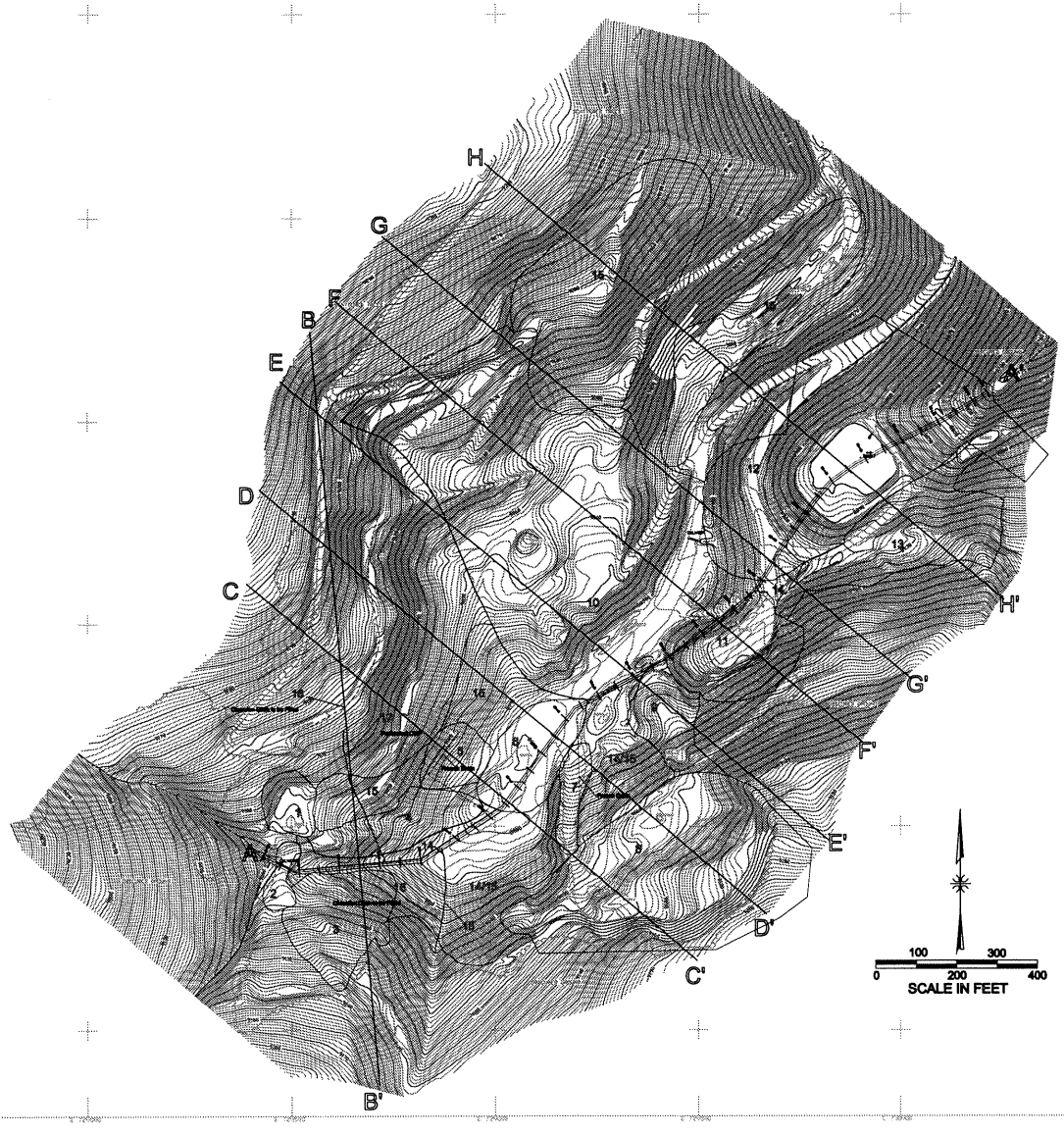

Contour Interval = 2'

State of Utah
DEPARTMENT OF NATURAL RESOURCES

DIVISION OF OIL, GAS AND MINING

White Oak Mine Reclamation

Current Topography

SHEET

D-2

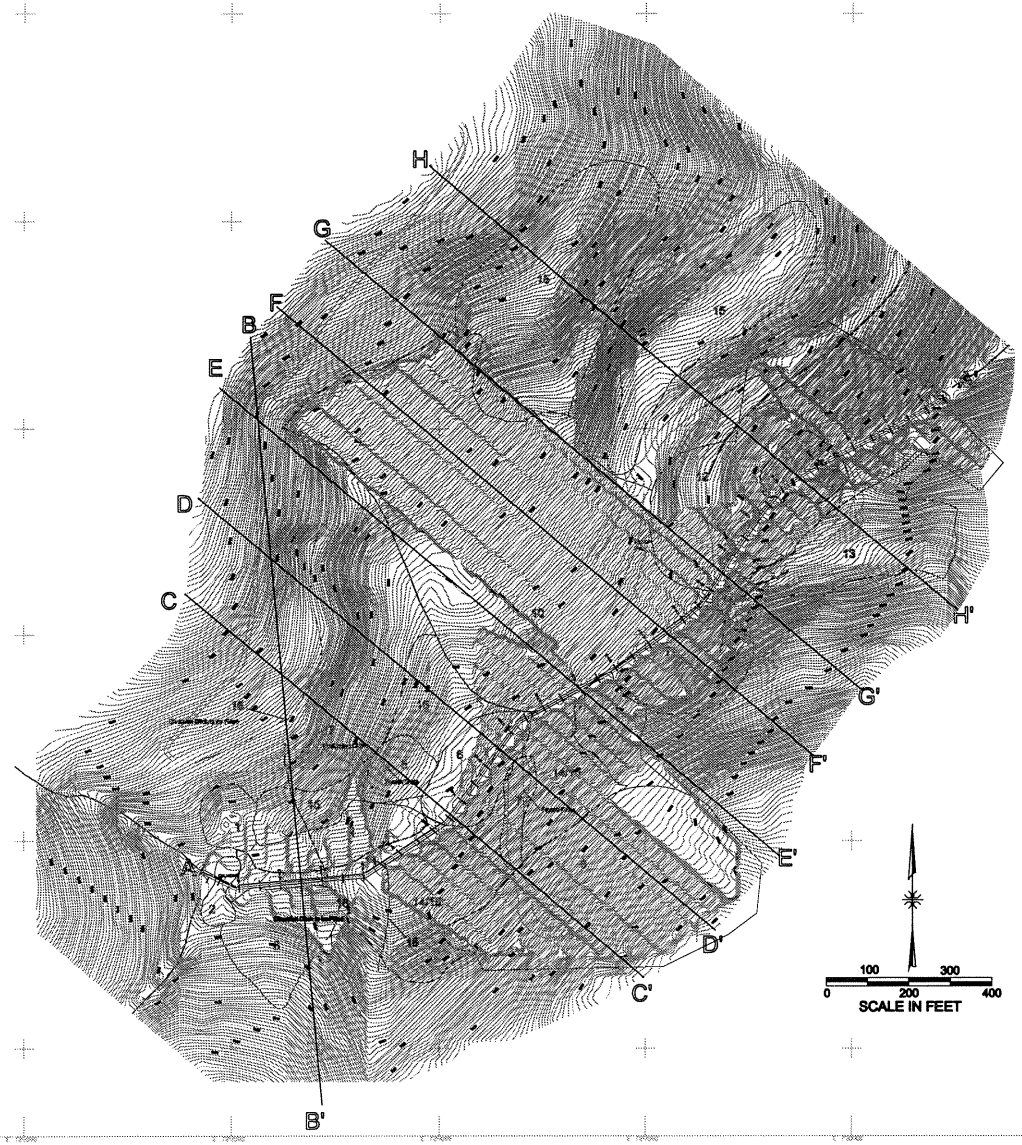

Contour Interval = 2'

State of Utah
DEPARTMENT OF NATURAL RESOURCES

DIVISION OF OIL, GAS AND MINING

White Oak Mine Reclamation

Design Topography

SHEET

D-3

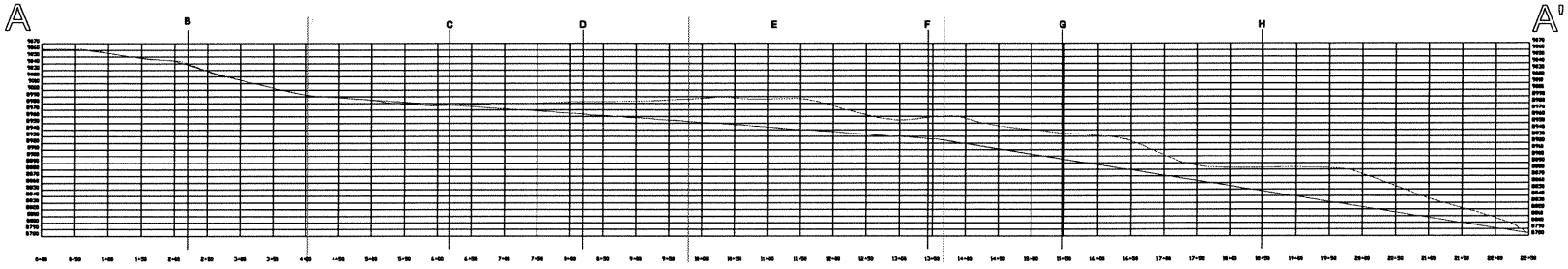

Current Surface Proposed Stream Channel

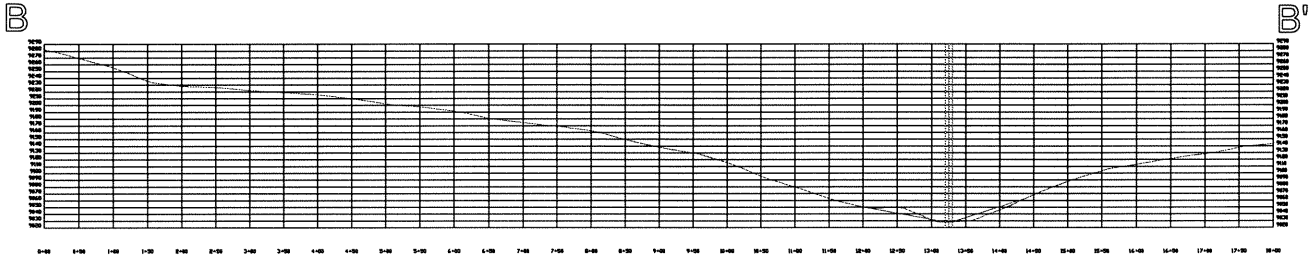

Current Surface Proposed Surface

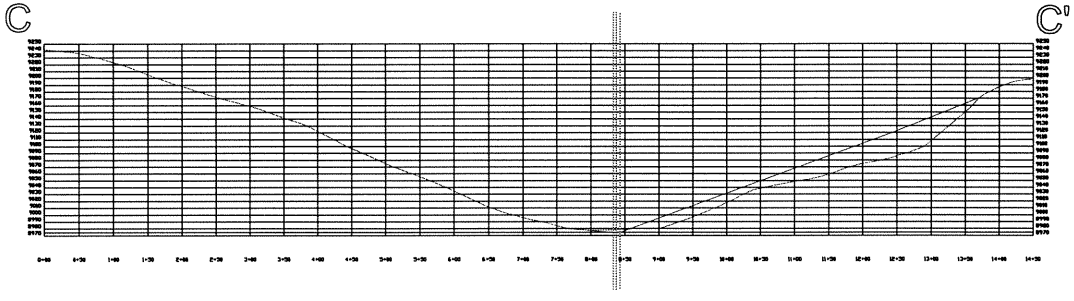

Current Surface Proposed Surface

State of Utah
DEPARTMENT OF NATURAL RESOURCES

DIVISION OF OIL, GAS AND MINING

White Oak Mine Reclamation

Cross-Sections A through C

SHEET

D-4a

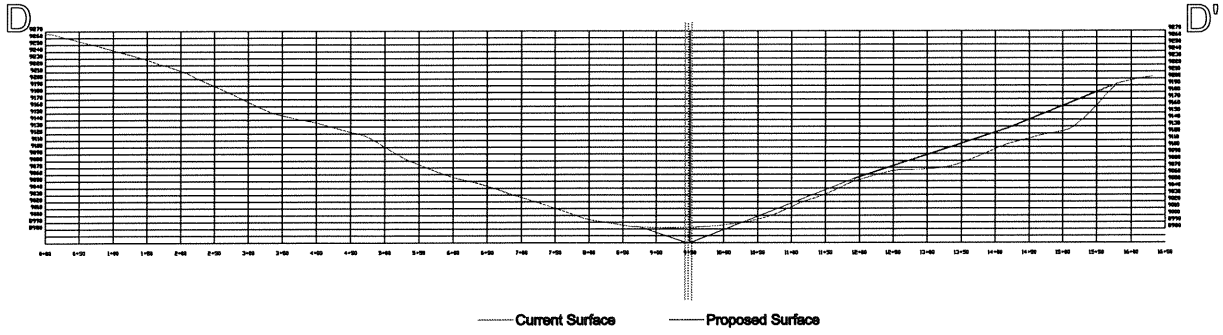

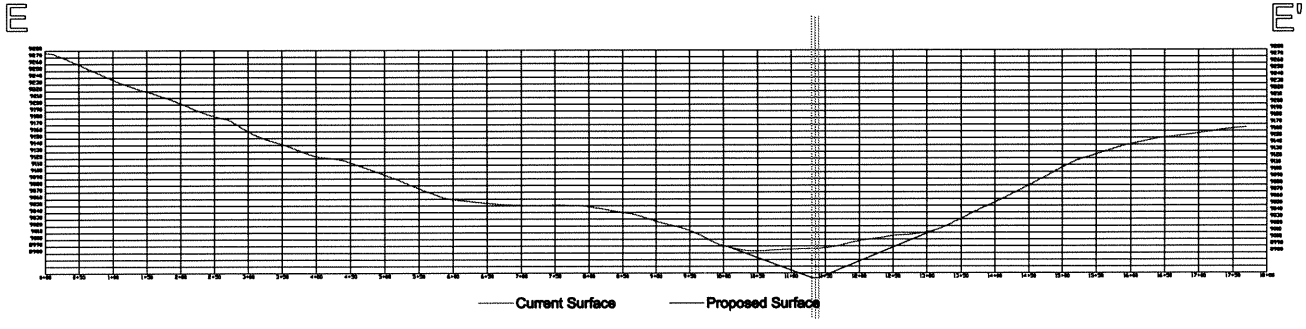

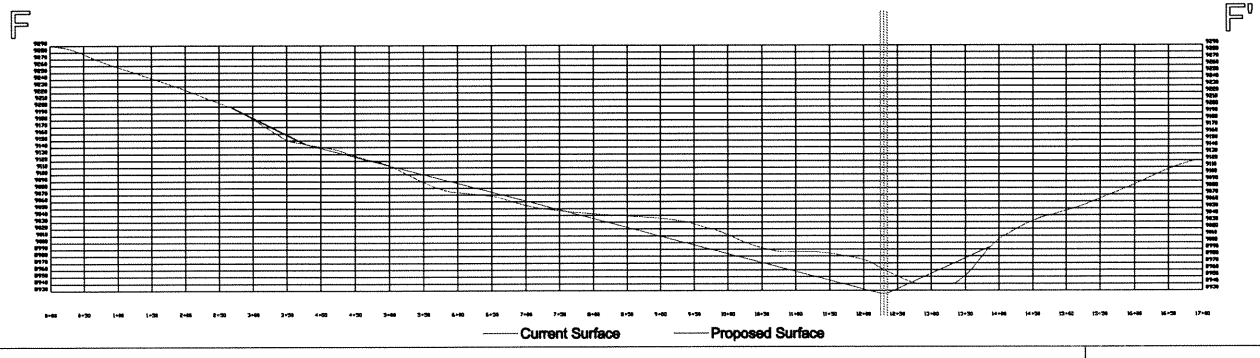

State of Utah
DEPARTMENT OF NATURAL RESOURCES

DIVISION OF OIL, GAS AND MINING

White Oak Mine Reclamation

Cross-Sections D through F

SHEET

D-4b

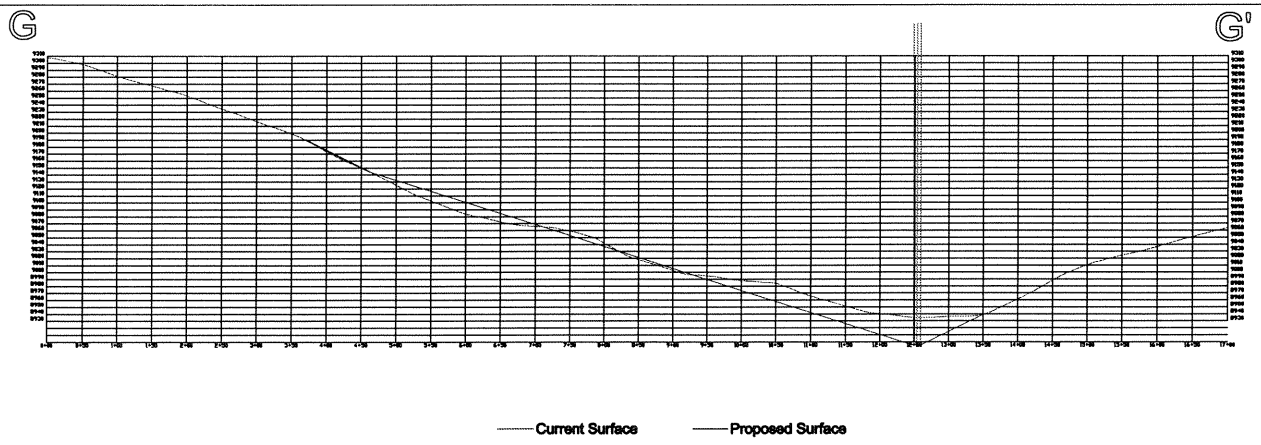

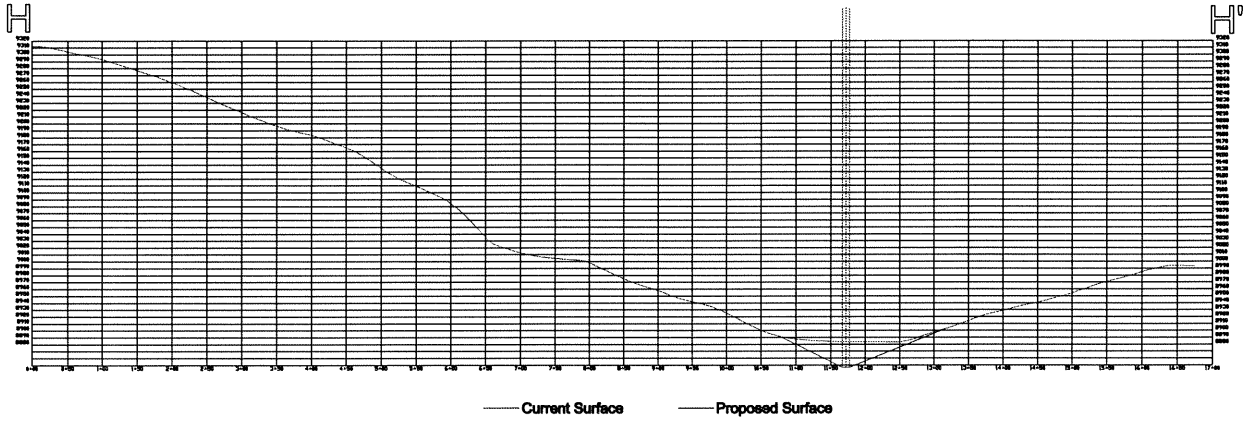

State of Utah
DEPARTMENT OF NATURAL RESOURCES

DIVISION OF OIL, GAS AND MINING

White Oak Mine Reclamation

Cross-Sections G through H

SHEET

D-4c

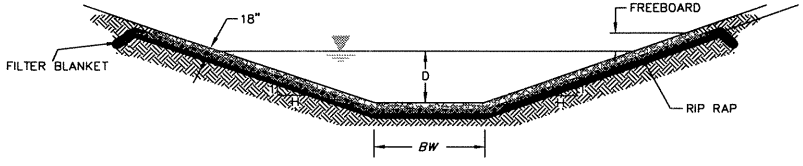

TYPICAL CHANNEL

NOT TO SCALE

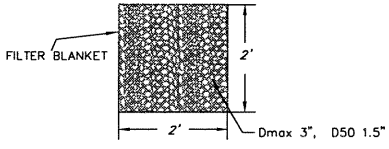

TYPICAL DRAIN

Channel	Bottom Width (BW) (ft)	Side Slope H:1V (ft)	Freeboard (ft)	Total Depth (ft)	Rip Rap D50 (in)	Rip Rap DMAX (in)
Channel A	*10*	*3:1*	*1.0*	*3.0*	*6*	*12*
Channel B	*5*	*3:1*	*1.0*	*1.0*	*6*	*12*

Channel B

Drawing Not to Scale

State of Utah
DEPARTMENT OF NATURAL RESOURCES

DIVISION OF OIL, GAS AND MINING

White Oak Mine Reclamation

Channel and Drain Designs

SHEET

D-5

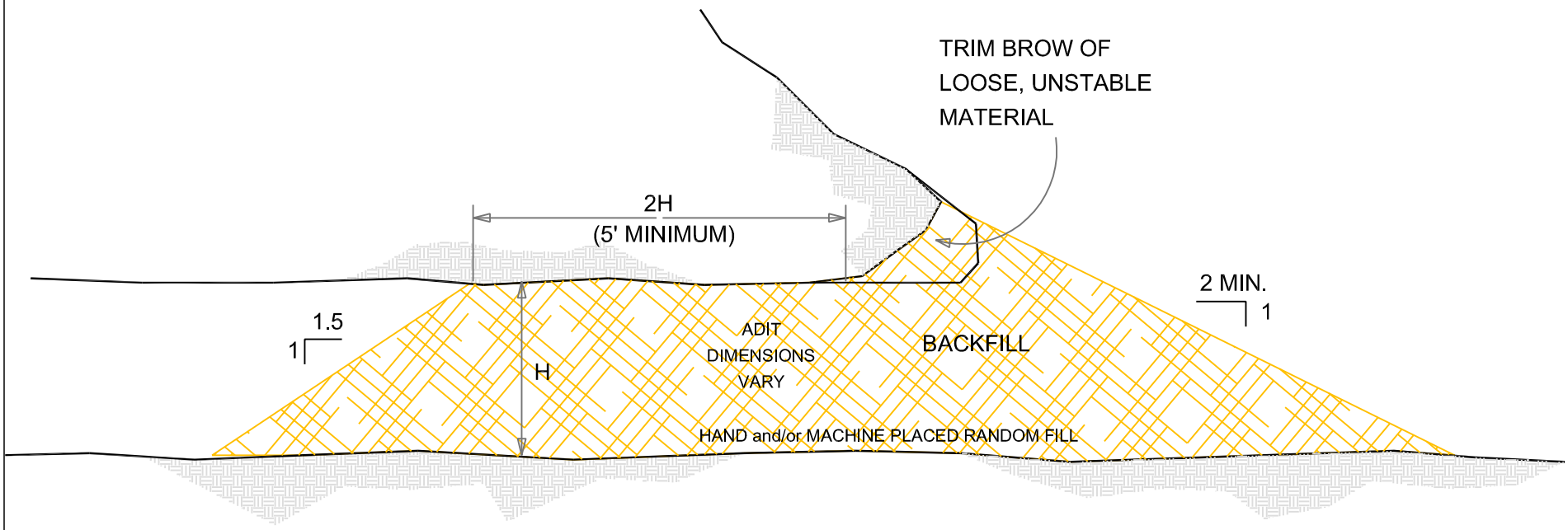

Utah Oil Gas and Mining **UTAH** **NATURAL RESOURCES** **Oil, Gas and Mining** Abandoned Mine Reclamation Program	**MINE RECLAMATION PROJECT**	**ADIT BACKFILL CLOSURE**	
		Scale: as noted	Design: LAA Drafting: JCR
		Refer to Spec Section 0253	Sheet E1 of E18

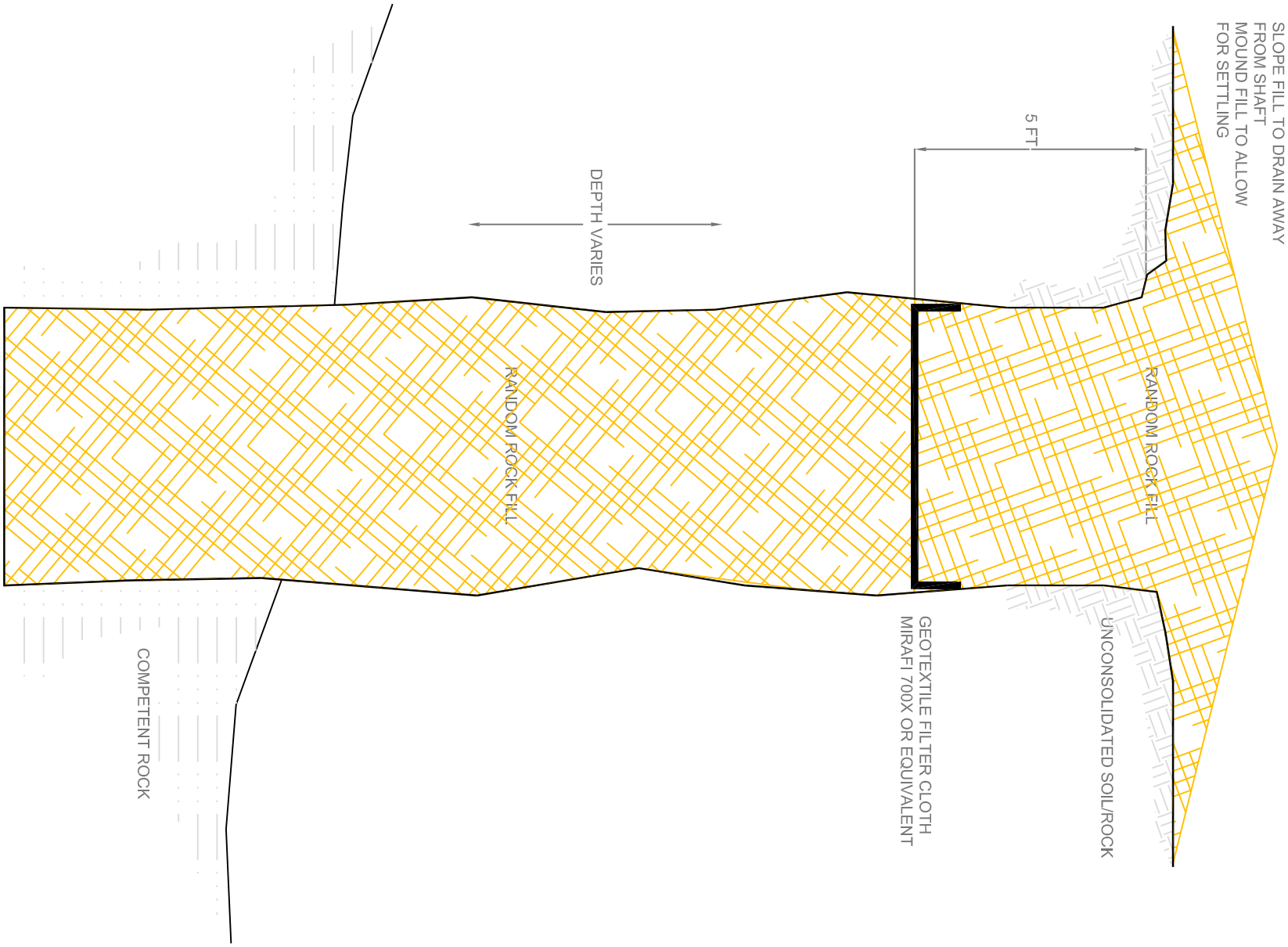

Utah Oil Gas and Mining **UTAH** **NATURAL RESOURCES** **Oil, Gas and Mining** Abandoned Mine Reclamation Program	**MINE RECLAMATION PROJECT**	**SHAFT BACKFILL CLOSURE**	
		Scale: as noted	Design: LAA Drafting: JCR
		Refer to Spec Section 0253	Sheet E2 of E18

TYPICAL ELEVATION

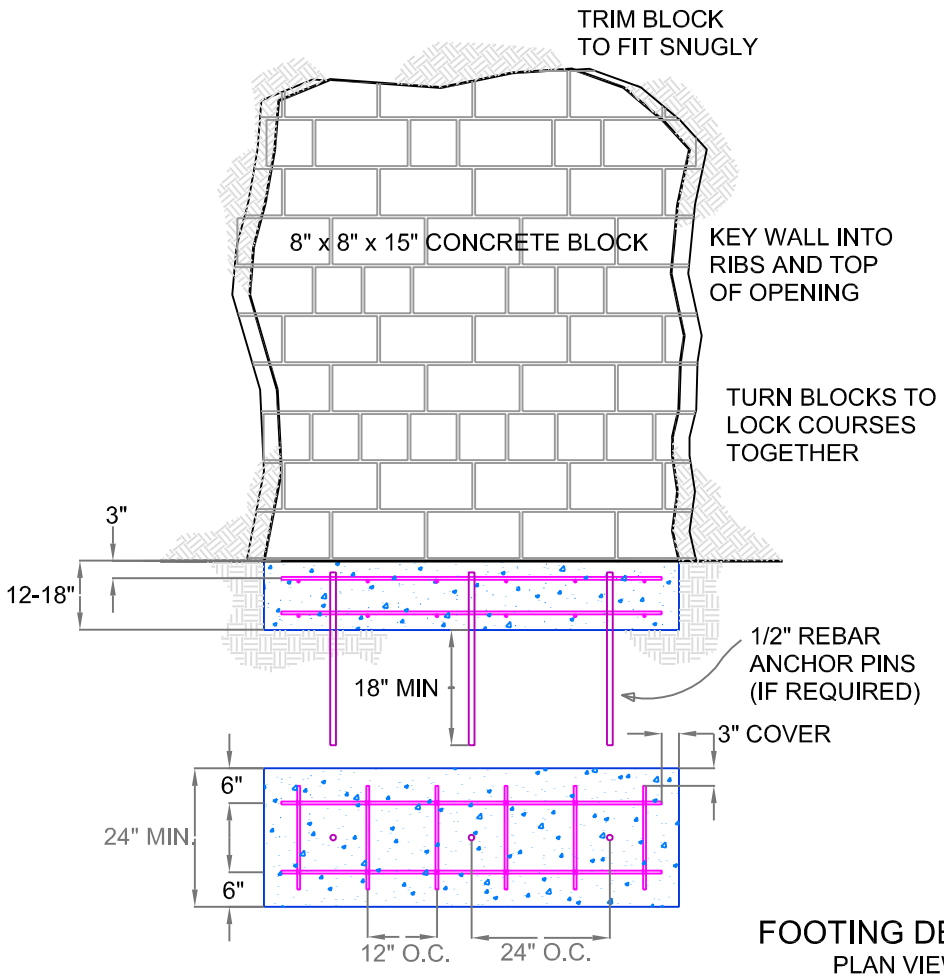

TYPICAL SECTION

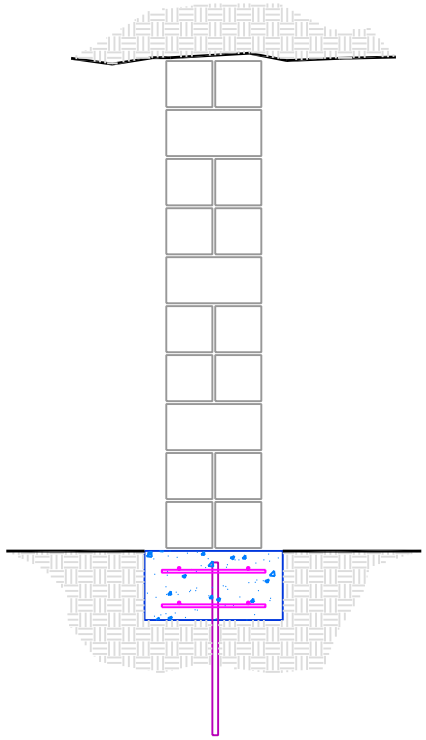

CONCRETE FOOTER AND
REBAR ANCHOR PINS MAY
BE OMITTED WITH OWNER'S
APPROVAL WHERE THE
SILL IS COMPETENT ROCK

FOOTING DETAIL
PLAN VIEW

PILASTER DETAIL

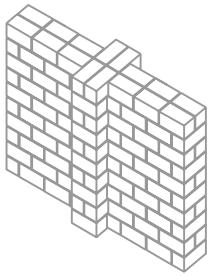

Utah Oil Gas and Mining **UTAH NATURAL RESOURCES** **Oil, Gas and Mining** Abandoned Mine Reclamation Program	**MINE RECLAMATION PROJECT**	**BLOCK WALL CLOSURE**	
		Scale: as noted	Design: LAA Drafting: JCR
		Refer to Spec Section 0253	Sheet E3 of E18

TYPICAL ELEVATION

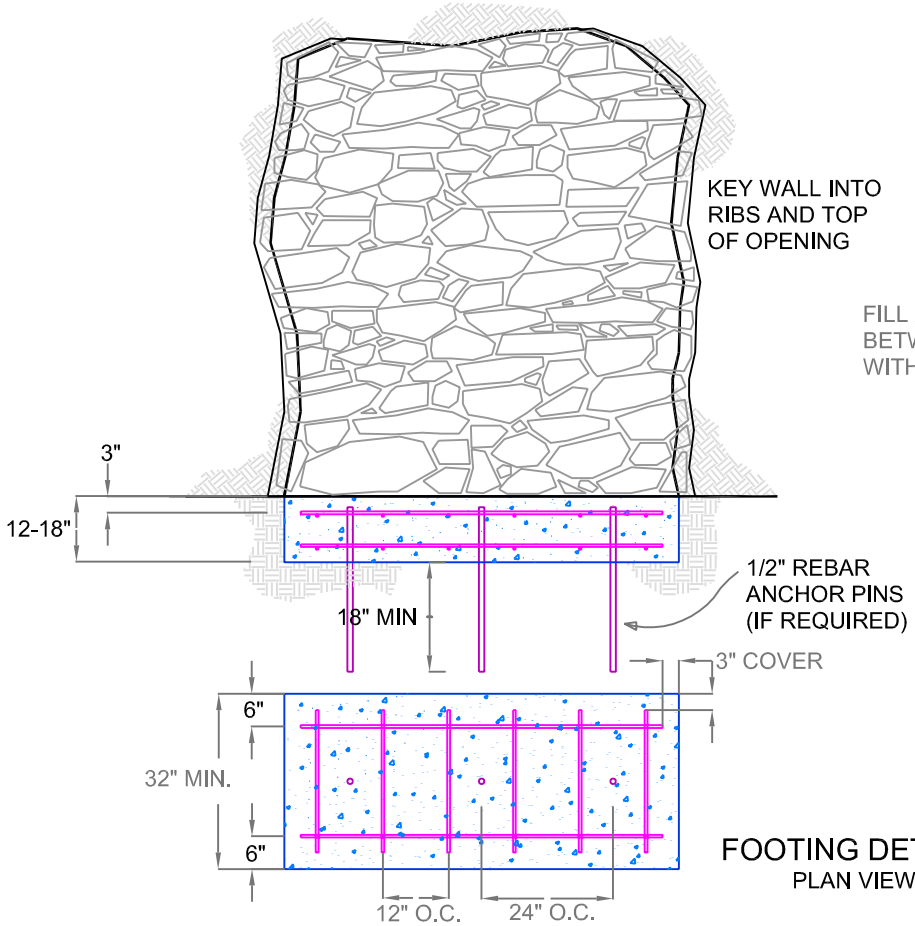

TYPICAL SECTION

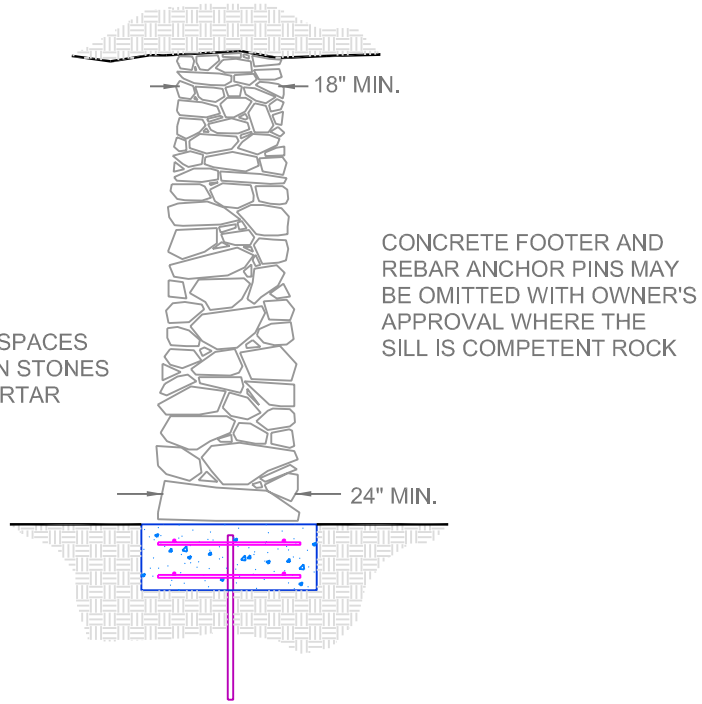

FOOTING DETAIL
PLAN VIEW

Utah Oil Gas and Mining **UTAH NATURAL RESOURCES** **Oil, Gas and Mining** Abandoned Mine Reclamation Program	**MINE RECLAMATION PROJECT**	**NATIVE STONE WALL CLOSURE**	
		Scale: as noted	Design: LAA Drafting: JCR
		Refer to Spec Section 0253	Sheet E4 of E18

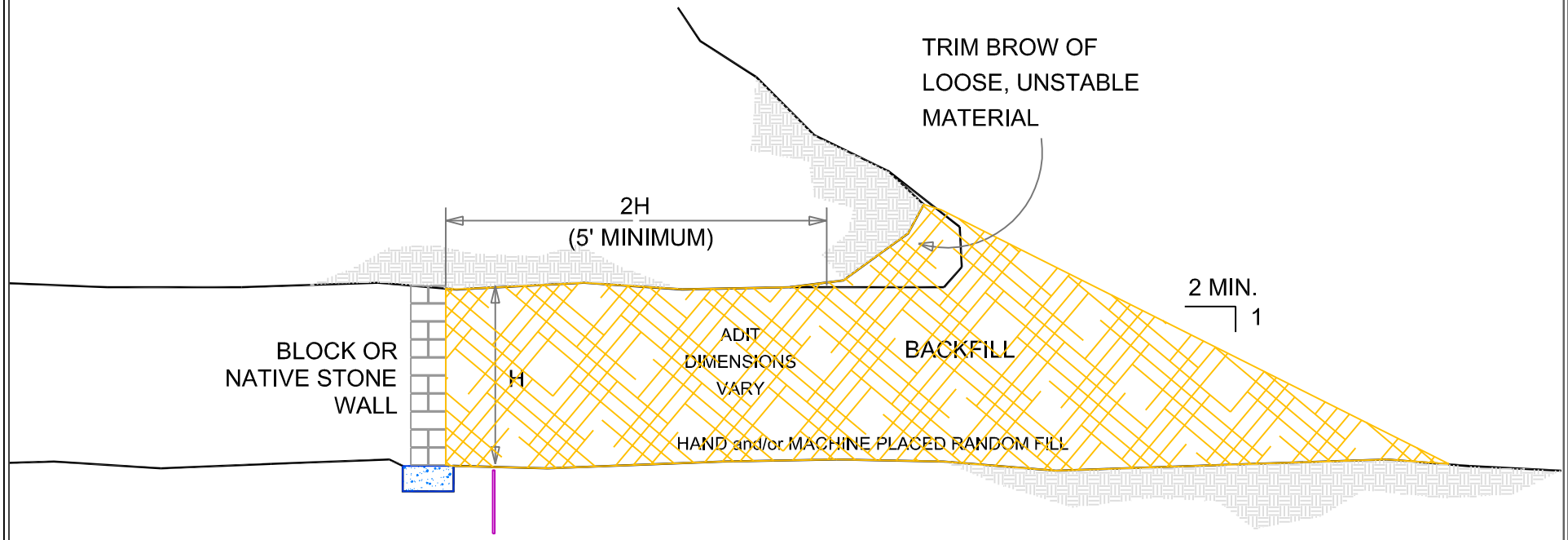

Utah Oil Gas and Mining **UTAH** **NATURAL RESOURCES** **Oil, Gas and Mining** Abandoned Mine Reclamation Program	**MINE RECLAMATION PROJECT**	**WALL AND BACKFILL CLOSURE**	
		Scale: as noted	Design: LAA Drafting: JCR
		Refer to Spec Section 0253	Sheet E5 of E18

TYPICAL ELEVATION

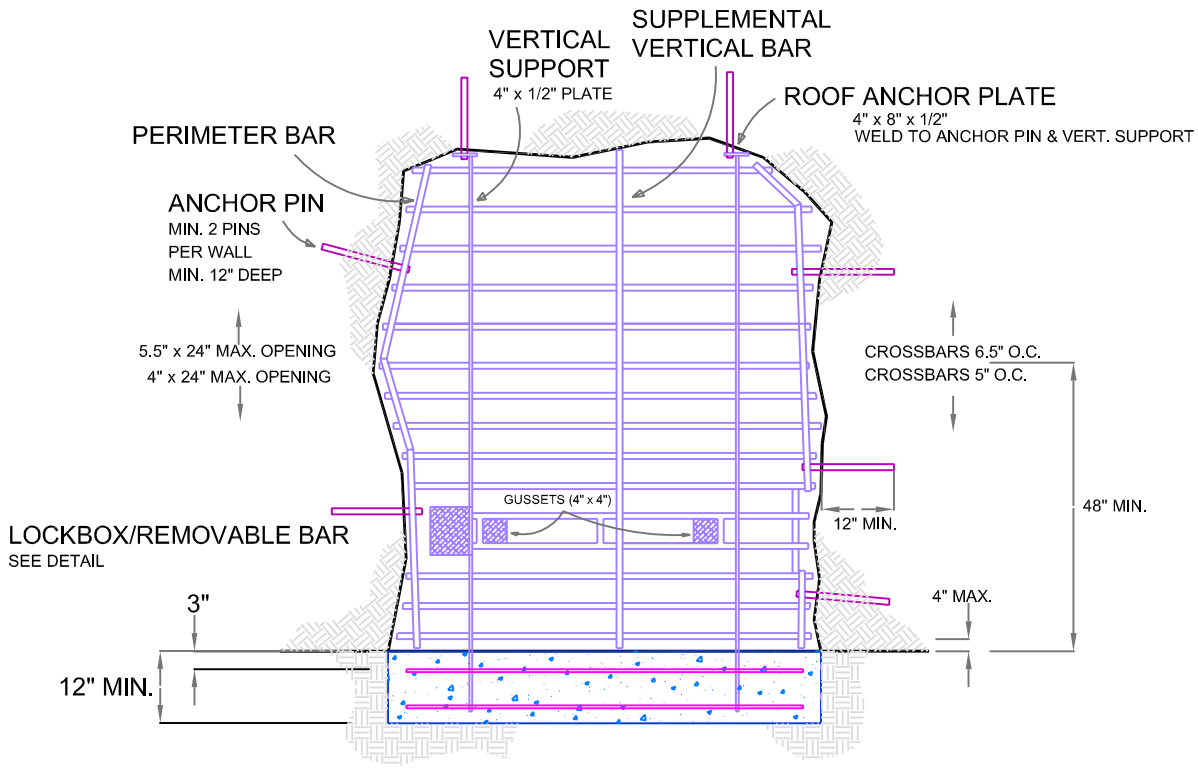

TYPICAL SECTION

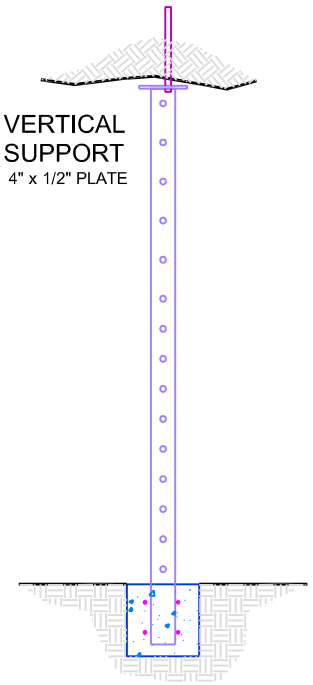

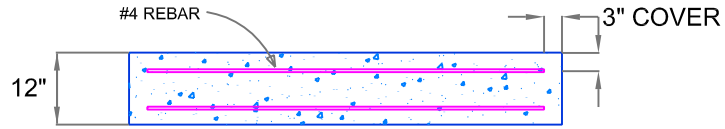

BARS FILLET WELD ALL INTERSECTIONS

FOOTING DETAIL
PLAN VIEW

NOTE: ALL GATE STEEL TO BE 12-14% MANGANESE STEEL (MANGANAL OR EQUIV.)

Utah Oil Gas and Mining **UTAH NATURAL RESOURCES** **Oil, Gas and Mining** Abandoned Mine Reclamation Program	**MINE RECLAMATION PROJECT**	**BAT GATE CLOSURE**	
		Scale: as noted	Design: LAA Drafting: JCR
		Refer to Spec Section 0253	Sheet E6 of E18

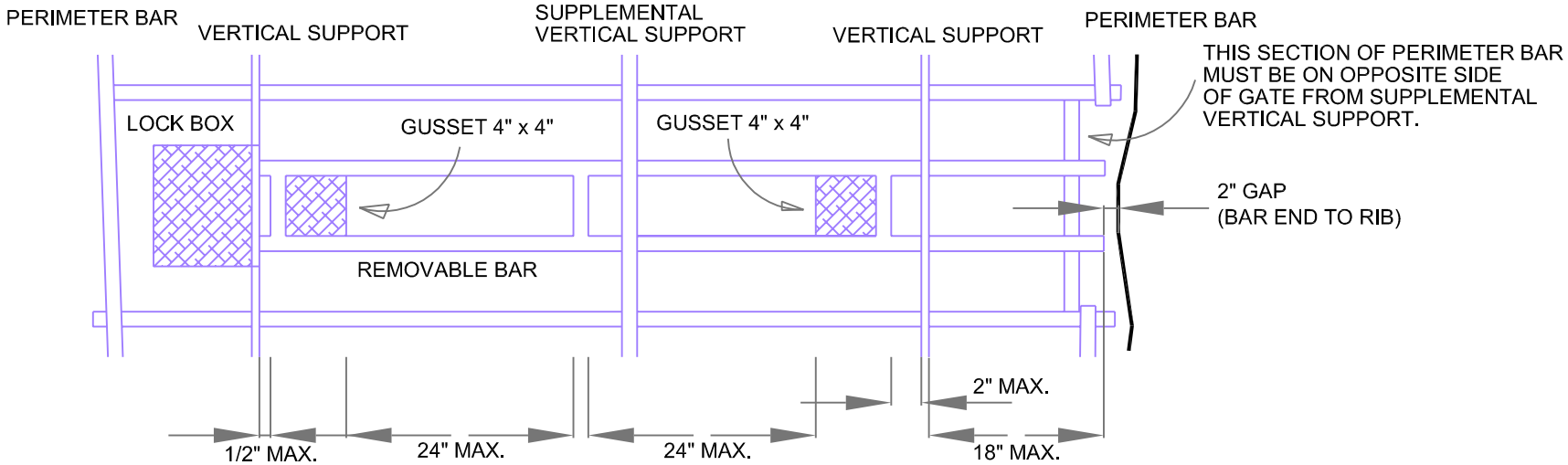

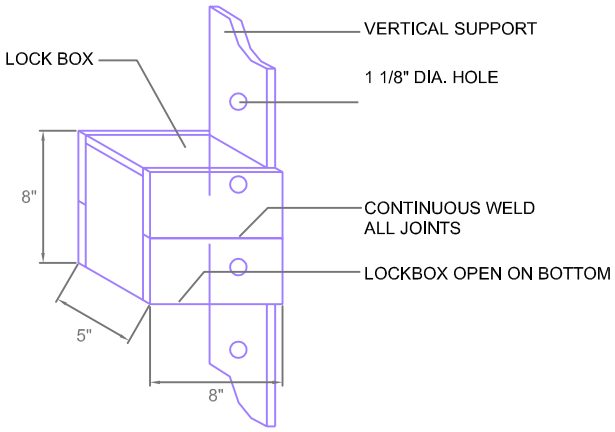

LOCK BOX
OBLIQUE VIEW

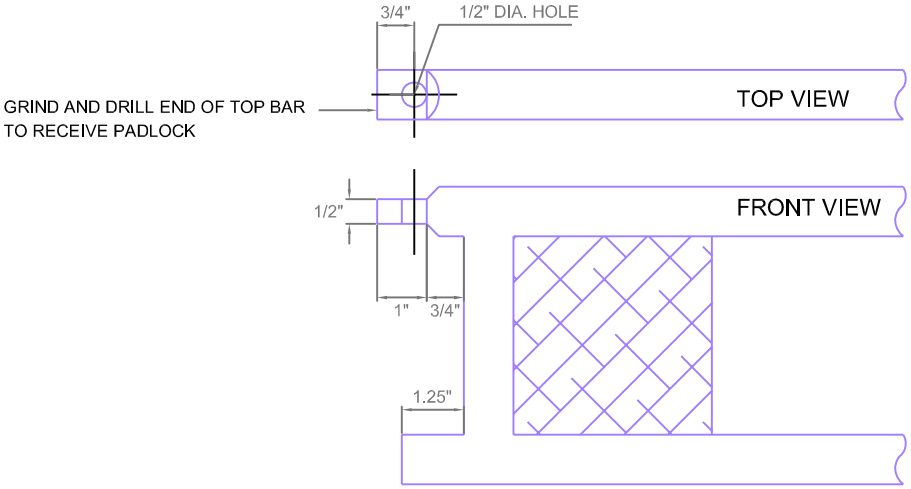

REMOVABLE BAR DETAIL

Utah Oil Gas and Mining **UTAH NATURAL RESOURCES** **Oil, Gas and Mining** Abandoned Mine Reclamation Program	**MINE RECLAMATION PROJECT**	**BAT GATE CLOSURE DETAILS**	
		Scale: as noted	Design: LAA Drafting: JCR
		Refer to Spec Section 0253	Sheet E7 of E18

TYPICAL ELEVATION

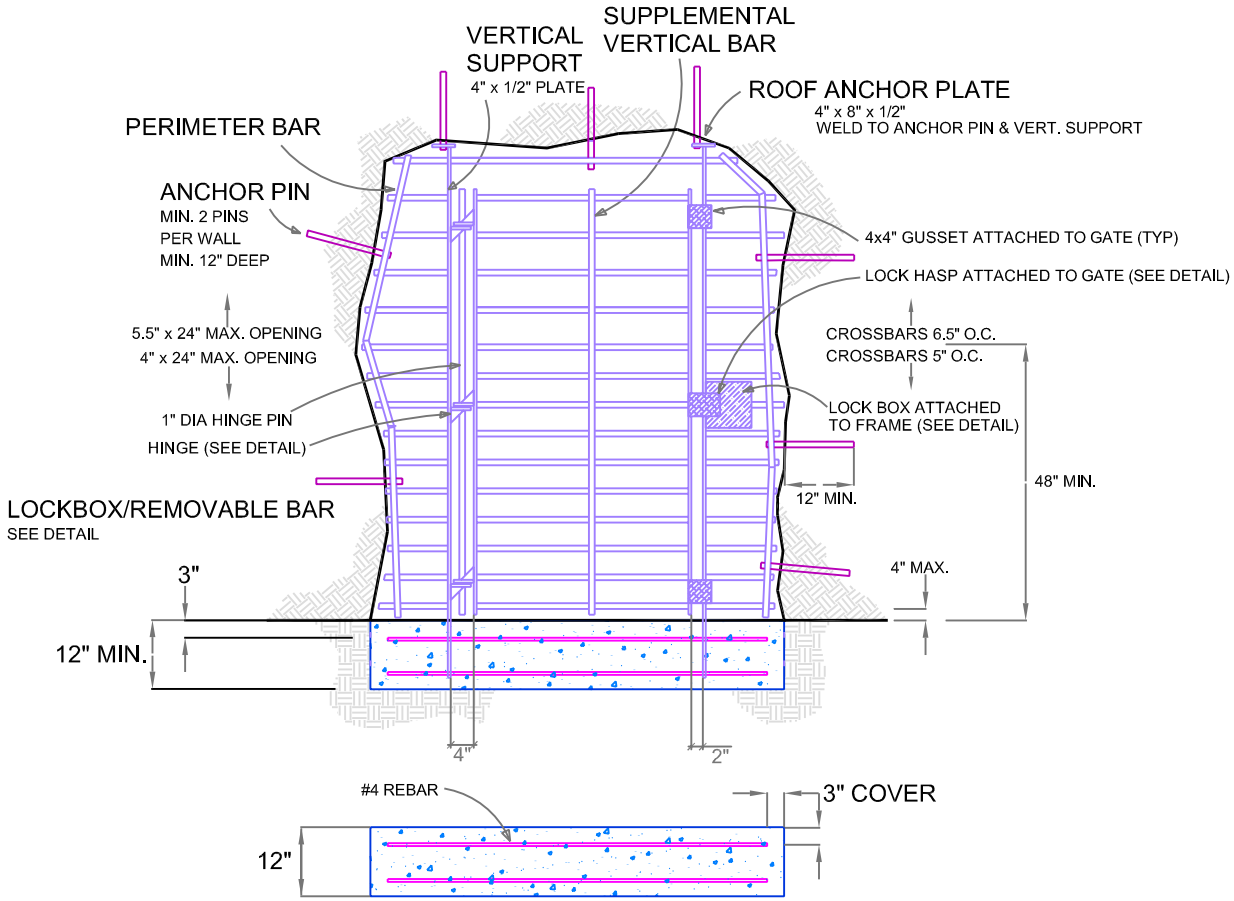

TYPICAL SECTION

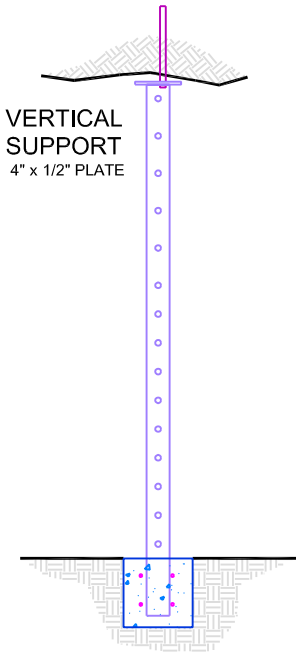

BARS FILLET WELD ALL INTERSECTIONS

FOOTING DETAIL
PLAN VIEW

NOTE: ALL GATE STEEL TO BE 12-14% MANGANESE STEEL (MANGANAL OR EQUIV.)

Utah Oil Gas and Mining **UTAH NATURAL RESOURCES** **Oil, Gas and Mining** Abandoned Mine Reclamation Program	**MINE RECLAMATION PROJECT**	**BAT GATE WITH DOOR CLOSURE**	
		Scale: as noted	Design: LAA Drafting: DR
		Refer to Spec Section 0253	Sheet E8 of E18

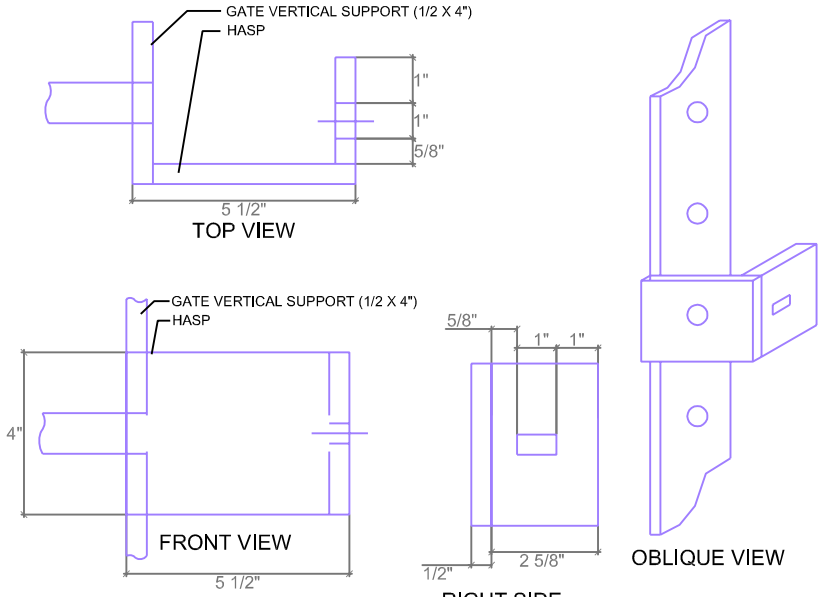

HASP DETAIL

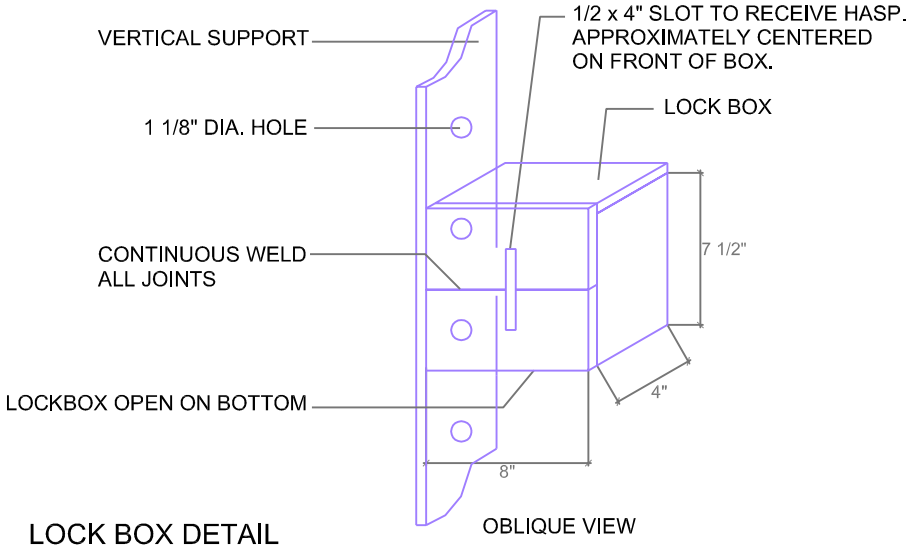

LOCK BOX DETAIL

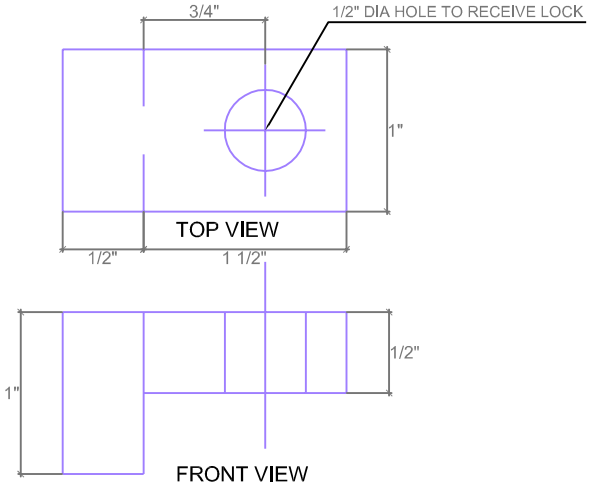

PIN DETAIL

NOTE: ALL GATE STEEL TO BE 12-14% MANGANESE STEEL (MANGANAL OR EQUIV.)

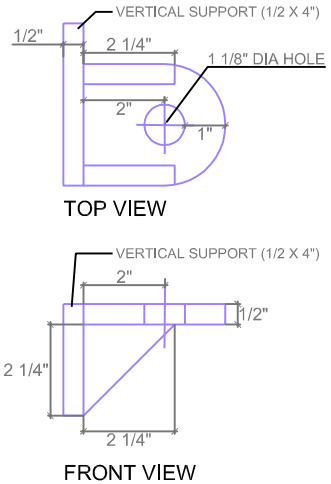

HINGE DETAIL

Utah Oil Gas and Mining	**UTAH NATURAL RESOURCES** **Oil, Gas and Mining** Abandoned Mine Reclamation Program	**MINE RECLAMATION PROJECT**
BAT GATE WITH DOOR CLOSURE DETAILS		
Scale: as noted	Design: LAA Drafting: DR	
Refer to Spec Section 0253	Sheet E9 of E18	

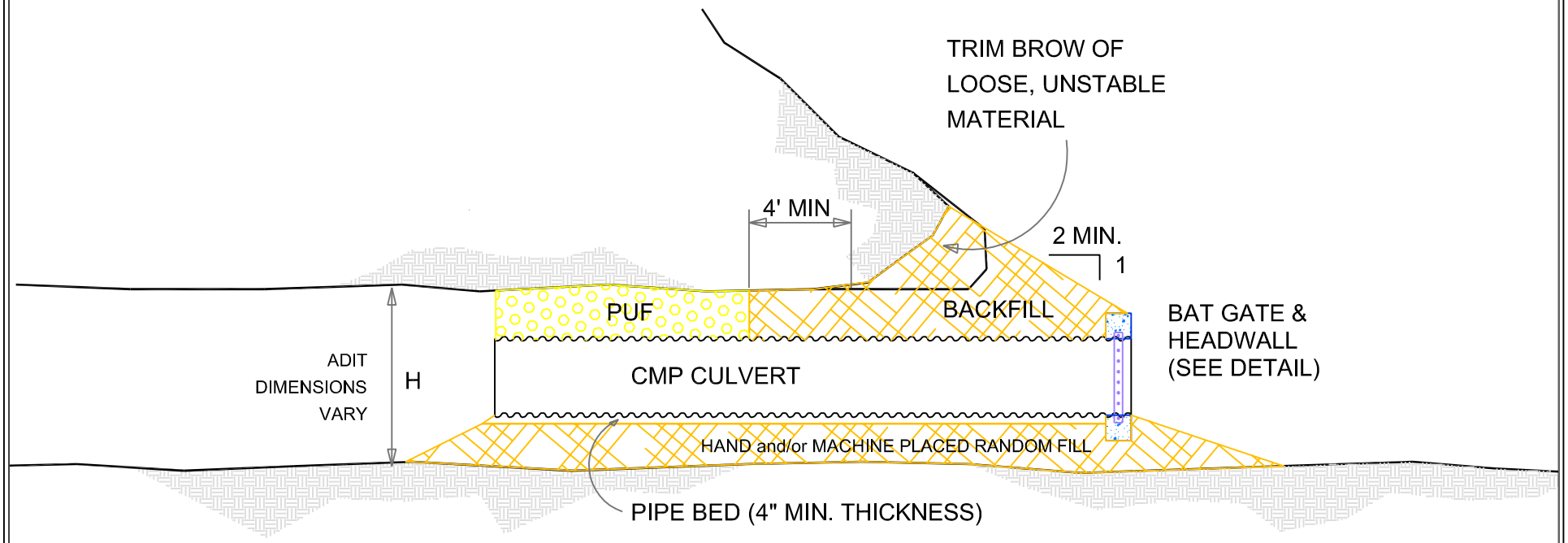

Utah Oil Gas and Mining **UTAH** **NATURAL RESOURCES** **Oil, Gas and Mining** Abandoned Mine Reclamation Program	**MINE RECLAMATION PROJECT**	**CMP BAT GATE CLOSURE**	
		Scale: as noted	Design: LAA Drafting: JCR
		Refer to Spec Section 0253	Sheet E10 of E18

TYPICAL ELEVATION

TYPICAL SECTION

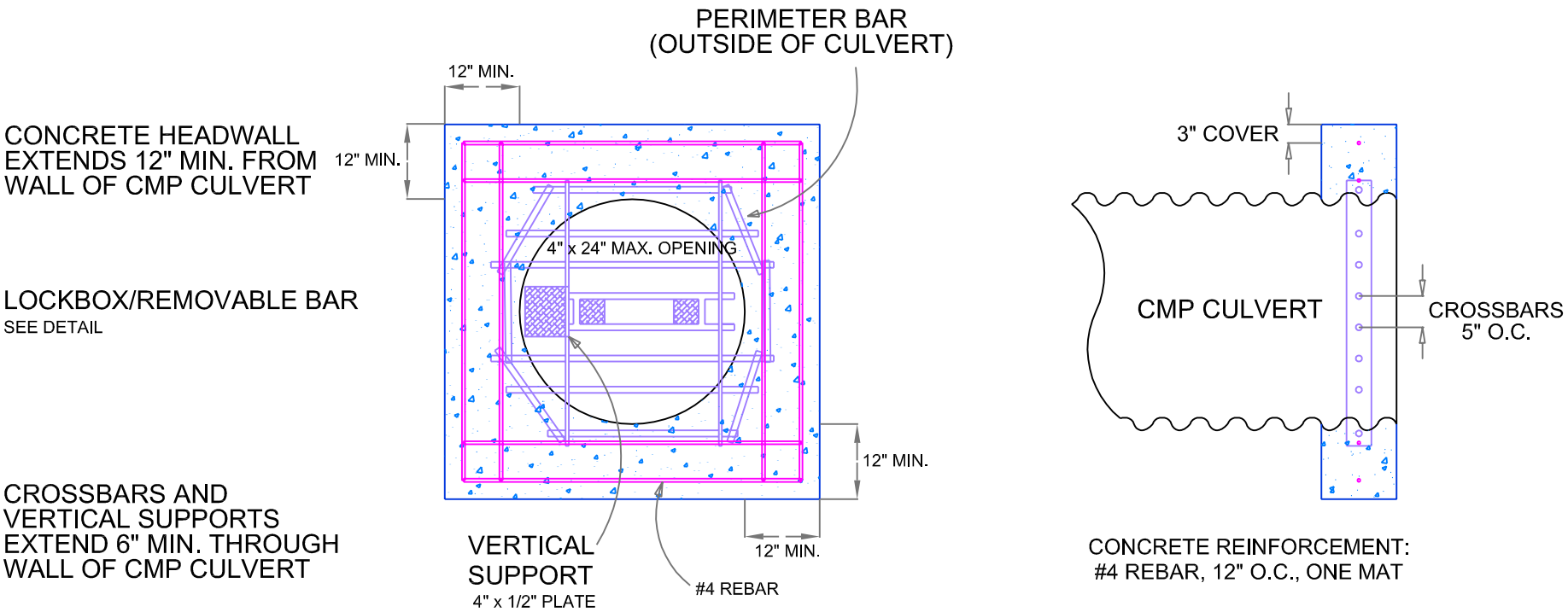

NOTE: ALL GATE STEEL TO BE 12-14% MANGANESE STEEL (MANGANAL OR EQUIV.)

Utah Oil Gas and Mining **UTAH NATURAL RESOURCES** **Oil, Gas and Mining** Abandoned Mine Reclamation Program	**MINE RECLAMATION PROJECT**	**CMP BAT GATE CLOSURE DETAILS**	
		Scale: as noted	Design: LAA Drafting: JCR
		Refer to Spec Section 0253	Sheet E11 of E18

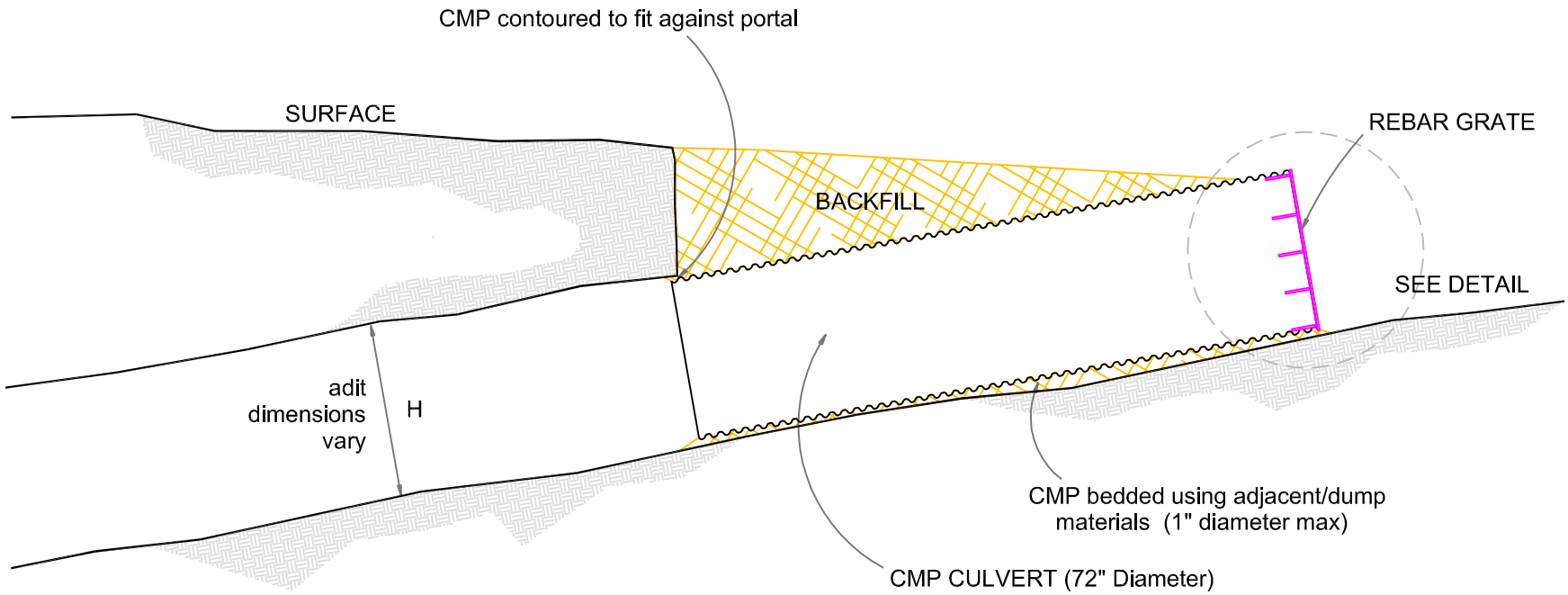

Utah Oil Gas and Mining **UTAH** **NATURAL RESOURCES** **Oil, Gas and Mining** Abandoned Mine Reclamation Program	**MINE RECLAMATION PROJECT**	**CMP/REBAR CLOSURE**	
		Scale: as noted	Design: LAA Drafting: MES
		Refer to Spec Section 0253	Sheet E12 of E18

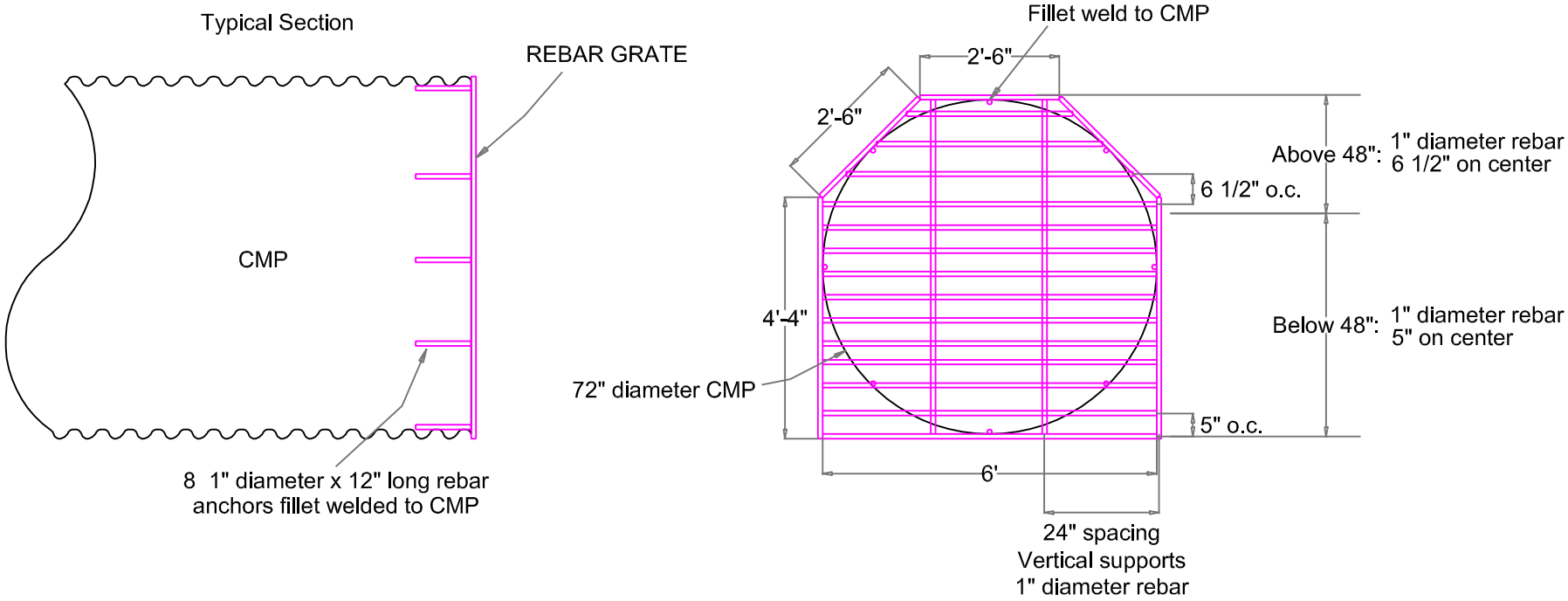

Note: Field dimensions may vary slightly

Utah Oil Gas and Mining **UTAH** **NATURAL RESOURCES** **Oil, Gas and Mining** Abandoned Mine Reclamation Program	**MINE RECLAMATION PROJECT**	**CMP/REBAR CLOSURE DETAILS**	
		Scale: as noted	Design: LAA Drafting: MES
		Refer to Spec Section 0253	Sheet E13 of E18

TYPICAL PLAN

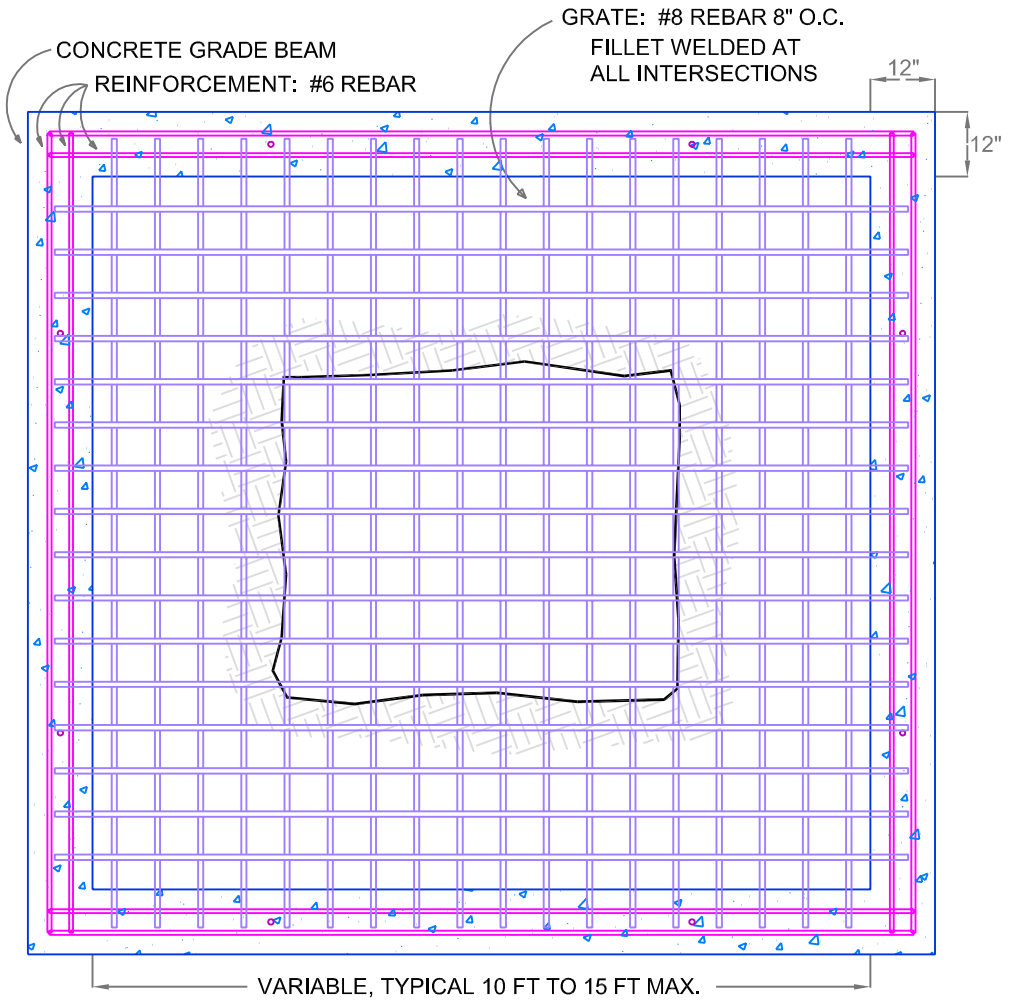

TYPICAL SECTION

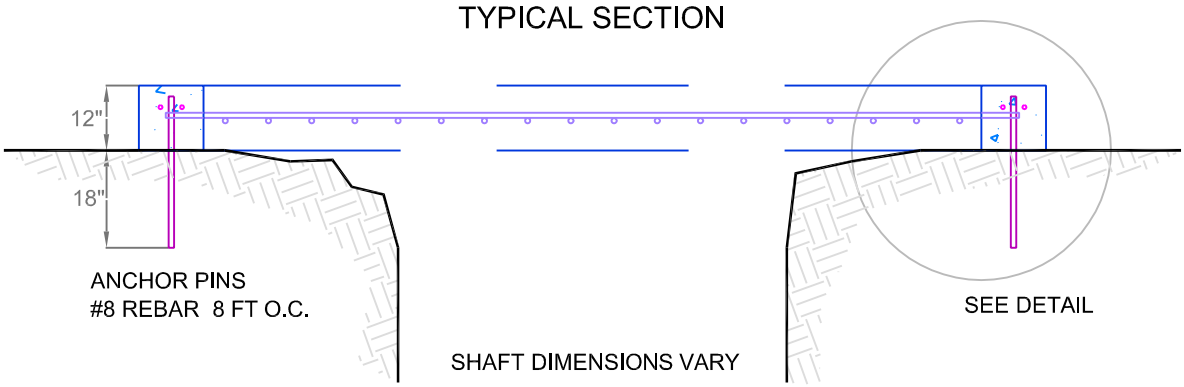

REBAR SHAFT GRATE CLOSURE

Design: LAA Drafting: JCR

Scale: as noted

Sheet E14 of E18

Refer to Spec Section 0253

MINE RECLAMATION PROJECT

UTAH NATURAL RESOURCES
Oil, Gas and Mining
Abandoned Mine Reclamation Program

Utah Oil Gas and Mining

TYPICAL PLAN

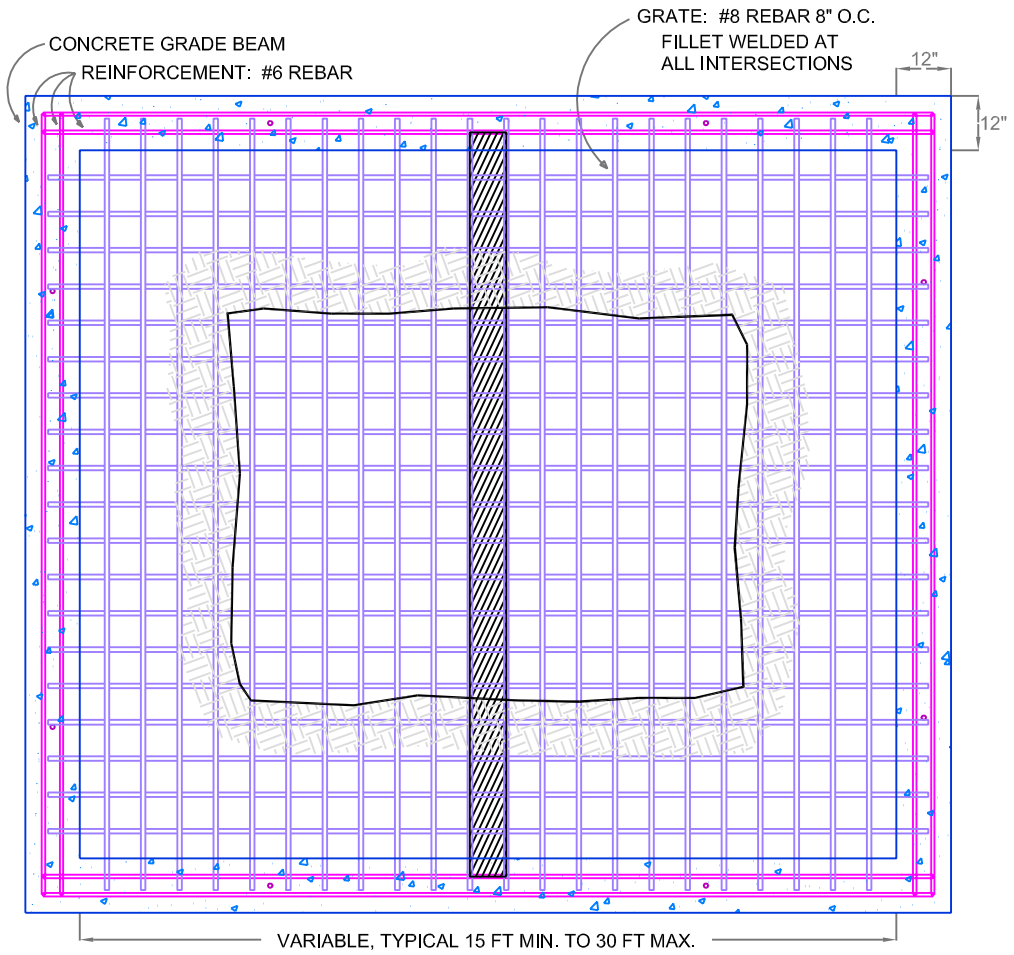

TYPICAL SECTION

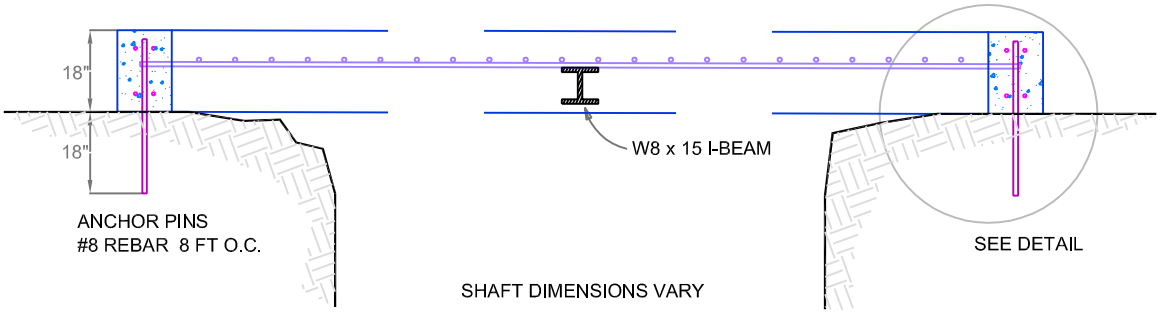

REBAR SHAFT GRATE (WITH I-BEAM)

Scale: as noted

Refer to Spec Section 0253

Design: LAA Drafting: JCR

Sheet E15 of E18

MINE RECLAMATION PROJECT

UTAH NATURAL RESOURCES
Oil, Gas and Mining
Abandoned Mine Reclamation Program

Utah Oil Gas and Mining

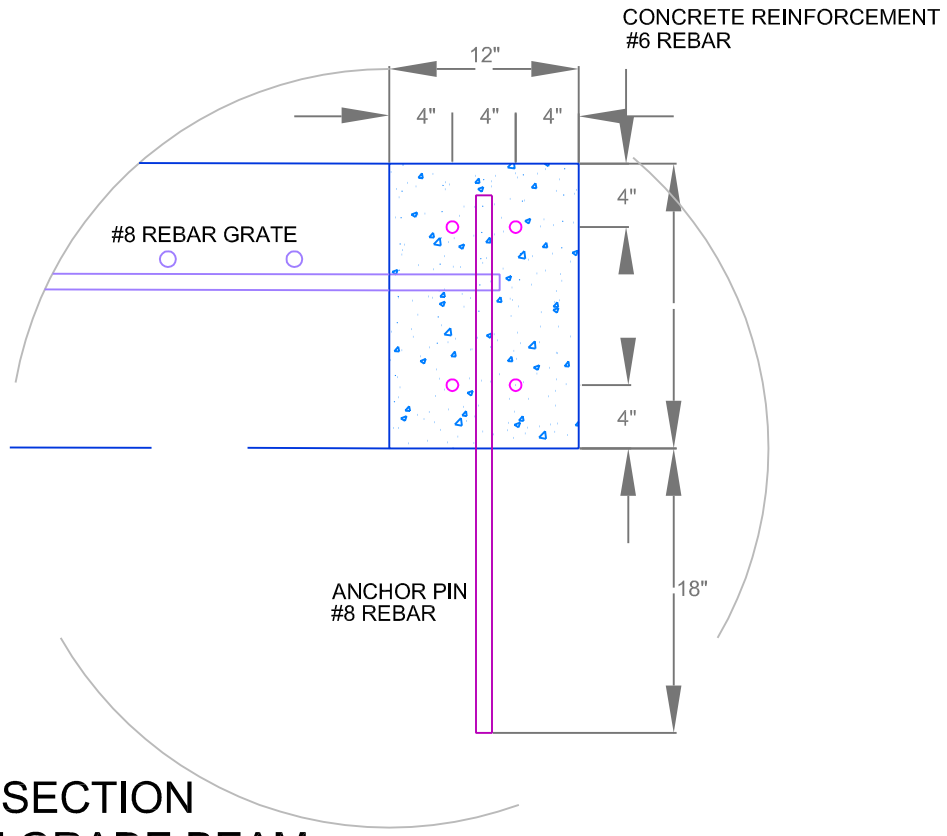

CROSS-SECTION
12" x 18" GRADE BEAM

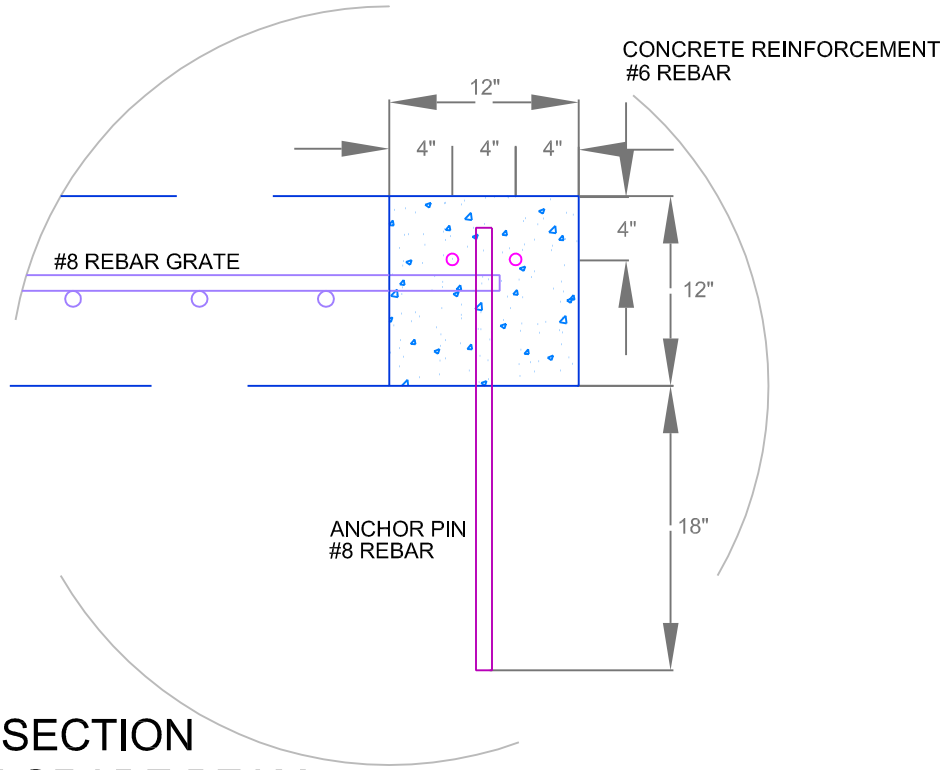

CROSS-SECTION
12" x 12" GRADE BEAM

REBAR SHAFT GRATE GRADE BEAM DETAILS

Scale: as noted

Design: LAA Drafting: JCR

Refer to Spec Section 0253

Sheet E16 of E18

MINE RECLAMATION PROJECT

UTAH NATURAL RESOURCES
Oil, Gas and Mining
Abandoned Mine Reclamation Program

Utah Oil Gas and Mining

TYPICAL SECTION

TYPICAL PLAN

UTAH NATURAL RESOURCES
Oil, Gas and Mining
Abandoned Mine Reclamation Program

Utah Oil Gas and Mining

MINE RECLAMATION PROJECT

REBAR SHAFT GRATE (PINNED)

Scale: as noted

Design: LAA Drafting: JCR

Refer to Spec Section 0253

Sheet E17 of E18

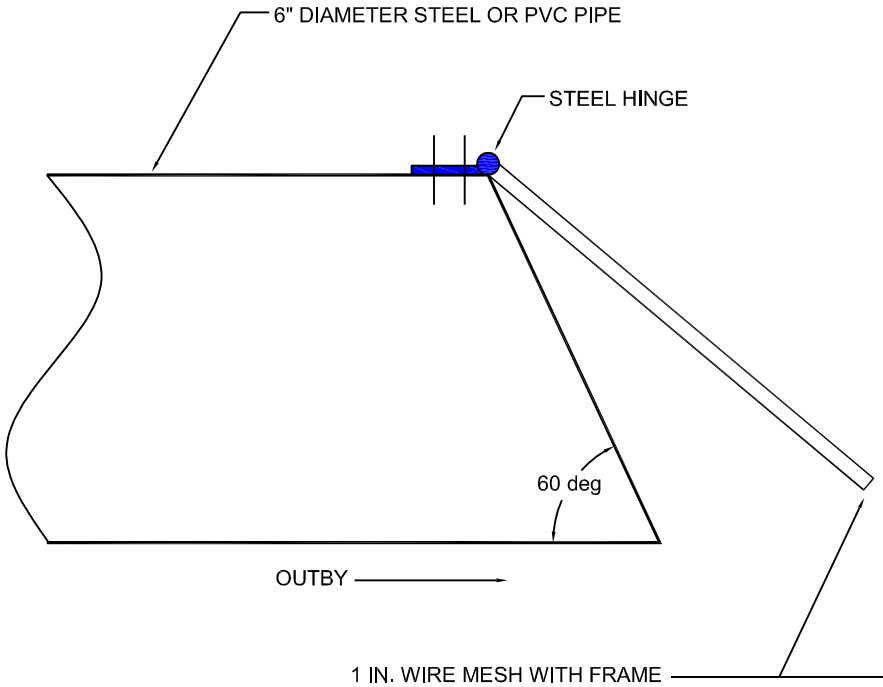

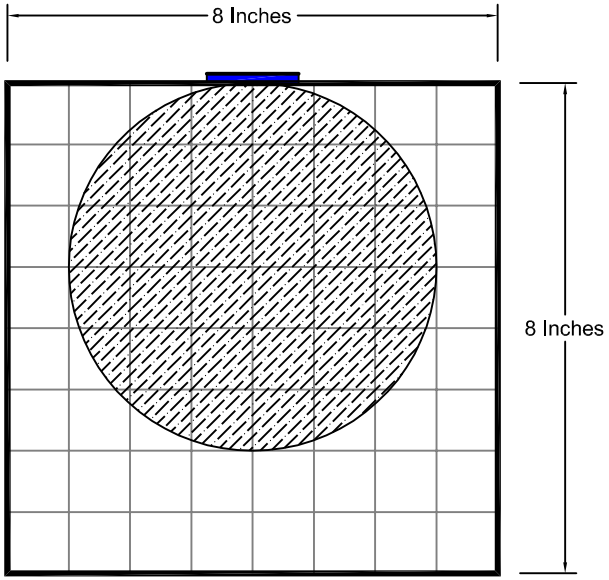

NOTE: STEEL OR PVC PIPE TO EXTENT 12 INCHES
INBY AND OUTBY WALL OR FILL MATERIAL

Utah Oil Gas and Mining **UTAH NATURAL RESOURCES** **Oil, Gas and Mining** Abandoned Mine Reclamation Program	**MINE RECLAMATION PROJECT**	**ONE-WAY TRAP DOOR CLOSURE DETAILS**	
		Scale: as noted	Design: LAA Drafting: DR
		Refer to Spec Section 0253	Sheet E18 of E18