MAIL TO:

STATE OF UTAH
DIVISION OF PURCHASING
3150 STATE OFFICE BUILDING, CAPITOL HILL
P.O. BOX 141061
SALT LAKE CITY, UTAH 84114-1061
TELEPHONE (801) 538-3026
FAX (801) 538-3882
http://www.purchasing.state.ut.us

Request for Quotation

Solicitation Number: **RF2174**

Due Date: **05/02/02**

Date Sent: April 22, 2002

Goods and services to be purchased: **FURNISH AND INSTALL AIR CONDITIONING SYSTEM (ESCALANTE, UTAH)**

Please complete

Company Name		Federal Tax Identification Number	
Ordering Address	City	State	Zip Code
Remittance Address (if different from ordering address)	City	State	Zip Code
Type ☐ Corporation ☐ Partnership ☐ Proprietorship ☐ Government	Company Contact Person		
Telephone Number (include area code)	Fax Number (include area code)		
Company's Internet Web Address	Email Address		
Discount Terms (for bid purposes, bid discounts less than 30 days will not be considered)	Days Required for Delivery After Receipt of Order (see attached for any required minimums)		

The following documents are included in this solicitation: Solicitation forms, instructions and general provisions, and specifications. Please review all documents carefully before completing.

The undersigned certifies that the goods or services offered are produced, mined, grown, manufactured, or performed in Utah. Yes_____ No_____. If no, enter where produced, etc._____

Offeror's Authorized Representative's Signature	Date
Type or Print Name	Position or Title

STATE OF UTAH
DIVISION OF PURCHASING &
GENERAL SERVICES

Request for Quotation

Solicitation Number: **RF2174**

Due Date: **05/02/02**

Vendor Name:

Item#	Qty	Unit	Description	Unit Price	Extension
001	1	LOT	FURNISH AND INSTALL A NEW CENTRAL AIR CONDITIONING SYSTEM AT UDOT MAINTENANCE STATION #4324 AT 1730 EAST 900 SOUTH ESCALANTE, UTAH. LOT PRICE BID SHALL INCLUDE ALL NECESSARY MODIFICATIONS TO THE EXISTING HEATING SYSTEM AND FACILITY.	$	$

WITH QUESTIONS REGARDING THE SPECIFICATIONS PLEASE CONTACT WILLIAM E. JUSZCAK AT(801)964-4522.
****
QUESTIONS REGARDING THE BID PROCESS SHOULD BE DIRECTED TO ROSEMARY FRENCHWOOD AT (801)538-3147.
****
A SITE IS RECOMMENDED IF BIDDING THIS PROJECT. TO ARRANGE FOR A SITE VISIT PLEASE CONTACT WADE BARNEY AT (435)826-4233.
****
THIS IS REQUEST FOR QUOTATION, THEREFORE, YOU MAY FAX YOUR BID RESPONSE TO (801)538-3882.
****
REFERENCE RX#: 810 252-24

Ship To: **1730 EAST 900 SOUTH**
ESCALANTE UT

FREIGHT CHARGES (if applicable)

SHIPPING POINT AND ZIP CODE	
SHIPPING WEIGHT	
MODE OF TRANSPORTATION (Please check one) **Q** Small package/Ground **Q** LTL(Less than truck load) NMFC Class # _____ NMFC Item # _____ **Q** Truckload **Q** Air **Q** Other (Please specify)	
TOTAL PRICE LESS FREIGHT (FOB Origin)	**$**
TOTAL PRICE INCLUDING FREIGHT (FOB Destination)	**$**

REQUEST FOR QUOTATION - INSTRUCTIONS AND GENERAL PROVISIONS

1. QUOTATION PREPARATION: (a) All prices and notations must be in ink or typewritten. (b) Price each item separately. Unit price shall be shown and a total price shall be entered for each item bid. Errors may be crossed out and corrections printed in ink or typewritten adjacent and must be initialed in ink by person signing quotation. (c) Unit price will govern, if there is an error in the extension. (d) Delivery time is critical and must be adhered to as specified. (e) Wherever in this document an item is defined by using a trade name of a manufacturer and/or model number, it is intended that the words, "or equivalent" apply. "Or equivalent" means any other brand that is equal in use, quality, economy and performance to the brand listed as determined by the Division of Purchasing & General Services (DIVISION). If the vendor lists a trade name and/or catalog number in the bid, the DIVISION will assume the item meets the specifications unless the quote clearly states it is an alternate, and describes specifically how it differs from the item specified. All quotes must include complete manufacturer's descriptive literature if quoting an equivalent product. (f) By signing the quotation the vendor certifies that all of the information provided is accurate, that they are willing and able to furnish the item(s) specified, and that prices quoted are correct. (g) This quote may not be withdrawn for a period of 60 days from quote due date. (h) Incomplete quotes may be rejected.

2. SUBMITTING THE QUOTATION: (a) The quote must be signed in ink and returned to the DIVISION OF PURCHASING, 3150 State Office Building, Capitol Hill, Salt Lake City, UT 84114-1061 by due date and time. **The "Solicitation Number" and "Due Date" must appear on the outside of the envelope.** (b) The state reserves the right to consider faxed quotes. Fax quotes are submitted at the sole option and risk of the vendor and must be responsive to all conditions and specifications included in the Request for Quotation (RFQ). Access to state facsimile machine is on a "first come first served" basis and the state does not guarantee the vendor's access to the machine at any particular time. (c) All prices quoted must be both F.O.B. Origin and F.O.B. Destination. Additional charges including but not limited to delivery, drayage, express, parcel post, packing, cartage, insurance, license fees, permits, costs of bonds, or for any other purpose must be included in the quotation for consideration and approval by the DIVISION. Upon award of the contract, the shipping terms will be F.O.B. Destination, Freight Prepaid with freight charges to be added to the invoice unless otherwise specified by the DIVISION.

3. FAILURE TO RESPOND: Failure to respond may result in the removal of your firm from the vendor's list for the commodity(s) listed.

4. PROPRIETARY INFORMATION: Suppliers are required to mark any specific information contained in their quote which is not to be disclosed to the public or used for purposes other than the evaluation of the quote. Each request for non-disclosure must be accompanied by a specific justification explaining why the information is to be protected. Pricing and service elements of any quote will not be considered proprietary. All material becomes the property of the state and may be returned only at the state's option. Quotes submitted may be reviewed and evaluated by any persons at the discretion of the state.

5. BONDS: The state has the right to require a bid bond, payment bond and/or a faithful performance bond from the vendor in an amount not to exceed the amount of the contract.

6. SAMPLES: Samples of item(s) specified in the RFQ, when required by DIVISION, must be furnished free of charge to DIVISION. Any items not destroyed by tests may, upon request made at the time the sample is furnished, be returned at the vendor's expense.

7. WARRANTY (including Year 2000):
The contractor agrees to warrant and assume responsibility for each hardware, firmware, and/or software product (hereafter called the product) that it licenses, or sells, to the State of Utah under this contract. The contractor acknowledges that the Uniform Commercial Code applies to this contract. In general, the contractor warrants that: (a) the product will do what the salesperson said it would do, (b) the product will live up to all specific claims that the manufacturer makes in their advertisements, (c) the product will be suitable for the ordinary purposes for which such product is used, (d) the product will be suitable for any *special purposes* that the State has relied on the contractor's skill or judgement to consider when it advised the State about the product, **especially to ensure year 2000 compatibility and fitness,** (e) the product has been properly designed and manufactured, and (f) the product is free of significant defects or unusual problems about which the State has not been warned. In general, **"year 2000 compatibility and fitness"** means: (1) the product warranted by the contractor will not cease to perform before, during, or after the calendar year 2000, (2) the product will not produce abnormal, invalid, and/or incorrect results before, during, or after the calendar year 2000, (3) will include, but not be limited to, date data century recognition, calculations that accommodate same century and multi-century formats, date data values that reflect century, and (4) accurately process date data (including, but not limited to, calculating, comparing, and sequencing) from, into, and between the twentieth and twenty-first centuries, including leap year calculations. If problems arise, the contractor will repair or replace (at no charge to the State) the product whose noncompliance is discovered and made known to the contractor in writing. If there is a Year 2000 problem, the contractor agrees to immediately assign senior engineering staff to work continuously until the product problem is corrected, time being of the essence. Nothing in this warranty will be construed to limit any rights or remedies the State of Utah may otherwise have under this contract with respect to defects other than Year 2000 performance.

8. DIVISION APPROVAL: Purchase Orders placed, or contracts written, with the State of Utah, as a result of this RFQ, will not be legally binding without the appropriate signature of the DIVISION.

9. AWARD OF CONTRACT: (a) **This is an informal quotation which will not be read at a public opening;** however, the information may be publicly reviewed after award. To obtain a copy of this record (tabulation) you may either enclose a stamped self-addressed envelope, or review tabulation in our office. (b) The contract will be awarded with reasonable promptness, by written notice to the lowest responsible vendor that meets the specifications. Consideration will to be given to the quality of the product(s) to be supplied, conformity to the specifications, the purpose for which required, delivery time required, discount terms and other criteria set forth in this request for quotation. (c) The DIVISION may accept any item or group of items, or overall low quote. (d) The DIVISION has the right to cancel this request for quotation at any time prior to the award of contract. (e) The DIVISION can reject any and all quotes or waive any informality, or technicality in any quote received, if the DIVISION believes it would serve the best interest of the State. (f) Before, or after, the award of a contract the DIVISION has the right to inspect the vendor's premises and all business records to determine the holder's ability to meet contract requirements. (g) Estimated quantities are for quoting purposes only, and not to be interpreted as a guarantee to purchase any amount. (h) Utah has a reciprocal preference law which will to be applied against vendors quoting products or services produced in states which discriminate against Utah products. For details see Section 63-56 20.5 -20.6, Utah Code Annotated. (i) Multiple contracts may be awarded if the State determines it would be in its best interest.

10. ANTI-DISCRIMINATION ACT: The vendor agrees to abide by the provisions of the Utah Anti-discrimination Act, Title 34 Chapter 35, U.C.A. 1953, as amended, and Title VI and Title VII of the Civil Rights Act of 1964 (42 USC 2000e), which prohibit discrimination against any employee or applicant for employment, or any applicant or recipient of services, on the basis of race, religion, color, or national origin; and further agrees to abide by Executive Order No. 11246, as amended, which prohibits discrimination on the basis of sex; 45 CFR 90 which prohibits discrimination on the basis of age, and Section 504 of the Rehabilitation Act of 1973, or the Americans with Disabilities Act of 1990, which prohibits discrimination on the basis of disabilities. Also vendor agrees to abide by Utah's Executive Order, dated March 17, 1993, which prohibits sexual harassment in the workplace. Vendor must include this provision in every subcontract or purchase order relating to purchases by the State of Utah to insure that the subcontractors and vendors are bound by this provision.

11. DEBARMENT: The CONTRACTOR certifies that neither it nor its principals are presently debarred, suspended, proposed for debarment, declared ineligible, or voluntarily excluded from participation in this transaction (contract) by any governmental department or agency. If the CONTRACTOR cannot certify this statement, attach a written explanation for review by the STATE.

12. GOVERNING LAWS AND REGULATIONS: All state purchases are subject to the Utah Procurement Code, Title 63 Chapter 56 U.C.A. 1953, as amended, and the Procurement Regulations as adopted by the Utah State Procurement Policy Board. These are available on the Internet at www.purchasing.state.ut.us. (Revision April 1, 1999 - RFQ.Instructions)

STATE OF UTAH
DEPARTMENT OF TRANSPORTATION
FACILITIES MAINTENANCE

NEW CENTRAL AIR CONDITIONER
UDOT STATION 4324 ESCALANTE
UDOT JOB NUMBER 81L24354

PROJECT DESCRIPTION

This project is to furnish and install a new central air conditioning system at the UDOT Maintenance Station 4324 in Escalante, Utah per this description and the attached specification.

The scope of work includes furnish and installation of a new central air conditioning system integrated with the existing forced air furnace for an approximate 700 square foot office area with the associated piping, insulation and all other material and equipment necessary for complete finished construction.

It is recommended that potential bidders visit the site during the bidding period. Visits can be arranged through Wade Barney, Station Supervisor, phone number (435) 826-4233. Questions during the bid period regarding the bid documents can be addressed to William E. Juszcak, phone number (801) 964-4522. All questions will be required to be submitted in writing one week prior to the bid date.

STATE OF UTAH
DEPARTMENT OF TRANSPORTATION
FACILITIES MAINTENANCE

SPECIFICATION FOR NEW CENTAL AIR CONDITIONING
ESCALANTE, UTAH

1 April 2002

GENERAL SPECIFICATIONS

BID

BIDDER _____

Submit Utah *INVITATION TO BID* with all required information.

For the work shown on the Drawings, described in the Specifications and Contract Documents and as described herein, I/we agree to perform all of the work indicated for the sum of:

_____ Dollars($_____)
(In case of discrepancy, written amount shall govern)

TIME OF COMPLETION AND DELAY REMEDY

The work shall be substantially complete by June 15, 2002. Contractor agrees to pay liquidated damages in the amount of $100 per day for each day after the expiration of the Contract Time until the Contractor achieves Substantial Completion.

PAYMENT

Payment will be made when the project is complete and approved by the Owner.
For prompt payment, mail invoice to:

William E. Juszcak
Facilities Manager
UDOT Maintenance Division
Box 148250
Salt Lake City, Utah 84114-8250

WORKERS COMPENSATION

The contractor will be required to furnish proof that all employees involved in this project are covered by Workmen's Compensation. The State will not be liable for injuries incurred during this project.

INSURANCE

Before contract award, successful bidder must provide a certificate of insurance certifying that the contractor will provide and maintain a policy of insurance in which the Department of Transportation is named as an additional insured. Coverage shall be in the following amounts:

1. $250,000 for bodily injury
2. $500,000 for each accident occurrence
3. $100,000 for property damage

If the contractor cannot obtain this insurance, the contractor shall provide a policy with a minimum coverage of $1,000,000 in the aggregate.

The certificate must also state that no cancellation or decrease in coverage shall be made without giving the State at least 30 days prior written notice.

MATERIALS

Material furnished to the State of Utah shall be certified as new and must meet all current State and Federal applicable building codes and safety regulations.

Material to include all air conditioning units, piping, electrical and controls, connections to existing fuel supply and electrical panels or modifications as required necessary for complete finished construction.

WARRANTY

Contractor shall provide a general written minimum full one year warranty, unless noted otherwise herein, for the replacement of all defective materials, including labor and travel, that are used in this project. Compressor to have minimum full five year warranty including labor and travel.

MANUAL AND TRAINING

Two sets of operation and maintenance manuals to be supplied with equipment. UDOT personnel to be trained in operation and owner maintenance of equipment.

Specification - Central Air Conditioner

DETAIL SPECIFICATIONS

FURNISH AND INSTALL CENTRAL AIR CONDITIONING SYSTEM

GENERAL - WORK INCLUDED

1. Furnish and install all materials and perform all labor necessary for the complete installation of a central air conditioning system as specified herein, to provide a complete functional system.
2. Temperature Control System (as required)
3. Prior to bid, it is recommended the contractor inspect existing heating system. Contractor shall note existing conditions. Contractor shall note in bid any alterations or repairs necessary to existing system to be made as a part of this work.

PRODUCTS

Required components include:

Condenser Unit

Refrigeration Piping

Thermostats and controls

Piping shall be hard copper tubing.

Evaporator coil shall comply with ARI 210/240.

Condensing units shall comply with ASHRAE 15.

Temperature controls shall be of the electric and electronic type. (Verify Existing)

Thermostat, if required, shall be mounted 66 inches above finished floor to centerline.

Provide all piping, controls, etc. as required for a complete system.

Connect units to wiring systems and to ground.

INSTALLATION

Prior to installation, diagrams, component data and sequence of operation are to be submitted for approval.

All installation to be good workmanship and in accordance with applicable codes.

Installation to include complete set of operation, maintenance and parts manuals for all equipment.

All piping and plumbing to be in accordance with the Uniform Plumbing Code with Utah annotations. Install refrigeration piping per ASHRAE 15.

Installation to include adjustment of system and test of all components witnessed by UDOT representative.

Specification - Central Air Conditioner

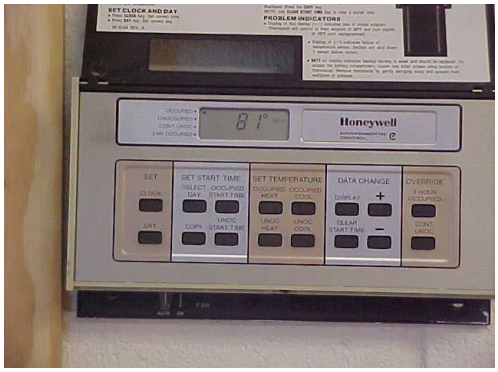

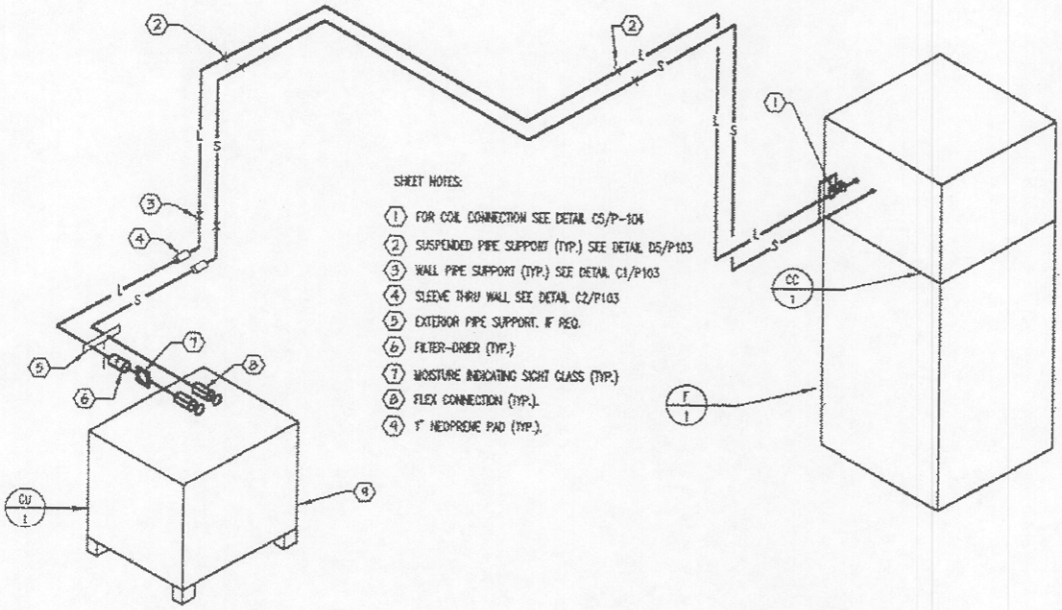

A1 REFRIGERANT PIPING SCHEMATIC

SCALE: N.T.S.

THERMOSTATIC BULB TO BE AS CLOSE TO COIL AS POSSIBLE.

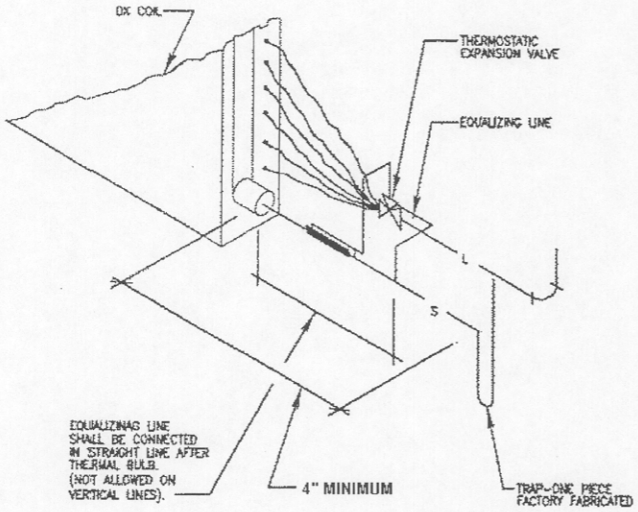

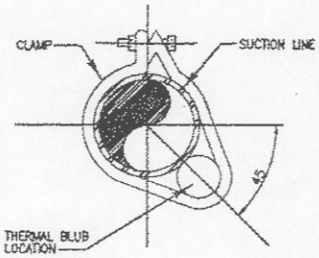

C5 REFRIGERANT COIL CONNECTION DETAILS

SCALE: N.T.S.

Escalante
Rx 810 252 024

FURNACE SCHEDULE (EXISTING) (CONTRACTOR VERIFY)

SYMBOL	INPUT BTU	OUTPUT BTU	CFM	EXT S.P.	FAN SPEED	FILTER		MOTOR				
						NO.	SIZE	HP	Ø	CYCLES	VOLT	DRIVE
F-1	110,000	89,000	1170	0.8"	MED-HIGH	1	20x25x1	3/4	1	60	120	DIRECT

CONDENSING UNIT (NEW)

UNIT NO.	MINIMUM BTUH	COMP. MOTOR			AIR COOLED CONDENSER					SEER
					FAN MOTOR					
		RLA	LRA	PHASE VOLT.	PHASE/VOLT	FLA	LRA	MAX FUSE	MCA	
CU-1	36,000	16.0	88	1/208	1/208	1.1	2.0	35	21.3	13

LENNOX MODEL HS26-036, WITH COMPATABLE COIL MOUNTED ON THE FURNACE; COIL SHALL BE ENCLOSED IN FACTORY FABRICATED CABINET. PROVIDE MAKE ALL CONNECTIONS TO CONDENSING UNITS AND TO FURNACES AS RECOMMEMDED BY SPLIT SYSTEM MANUFACTURER. SIZE SUCTION AND LIQUID LINES AS RECOMMENDED BY MANUFACTURER AND ASHRAE. PROVIDE ALL LIQUID AND SUCTION LINE ACCESSORIES AS RECOMMENDED BY MANUFACTURER AND AS SHOWN ON DETAILS.

Escalante
RX 810 250 024

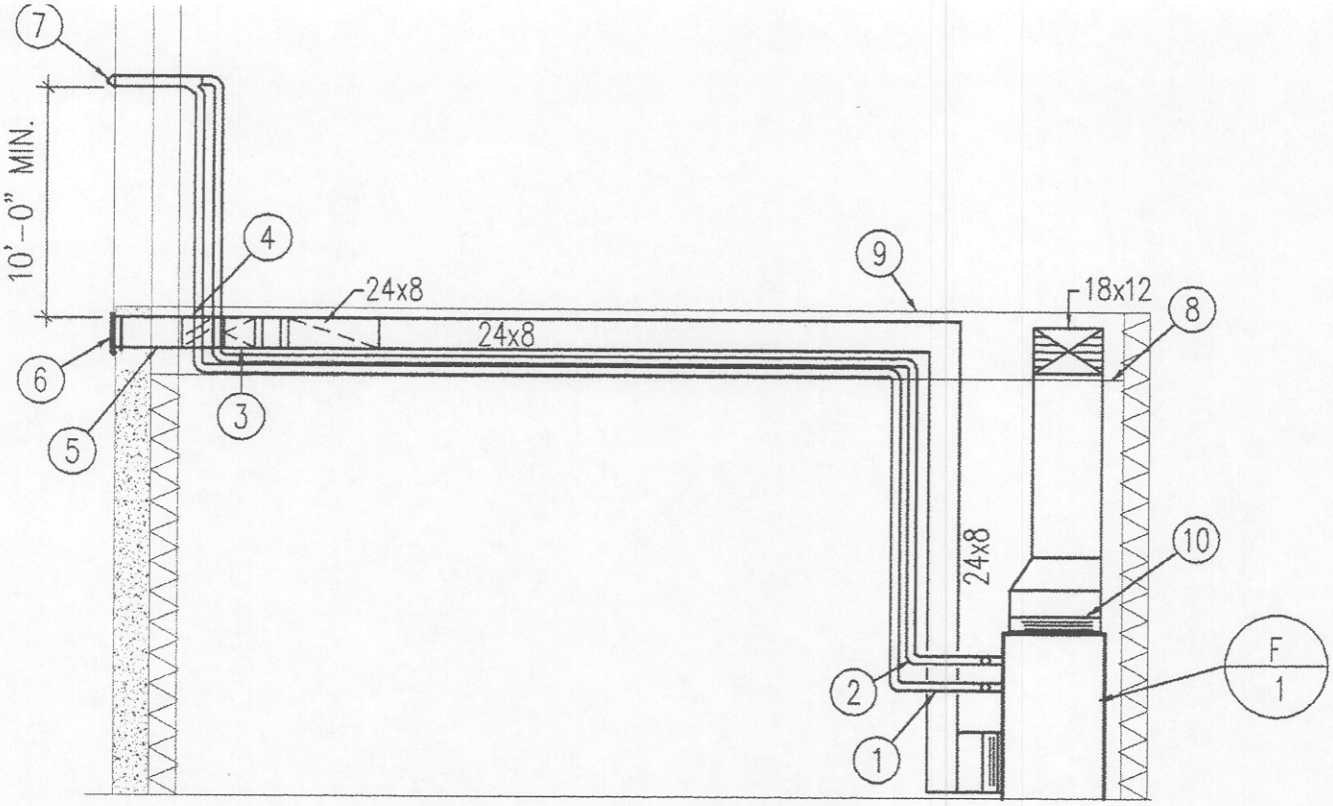

MECHANICAL ROOM SECTION

SCALE : 1/4" = 1'-0"

1
M-102

Escalante
Rx 810 252024

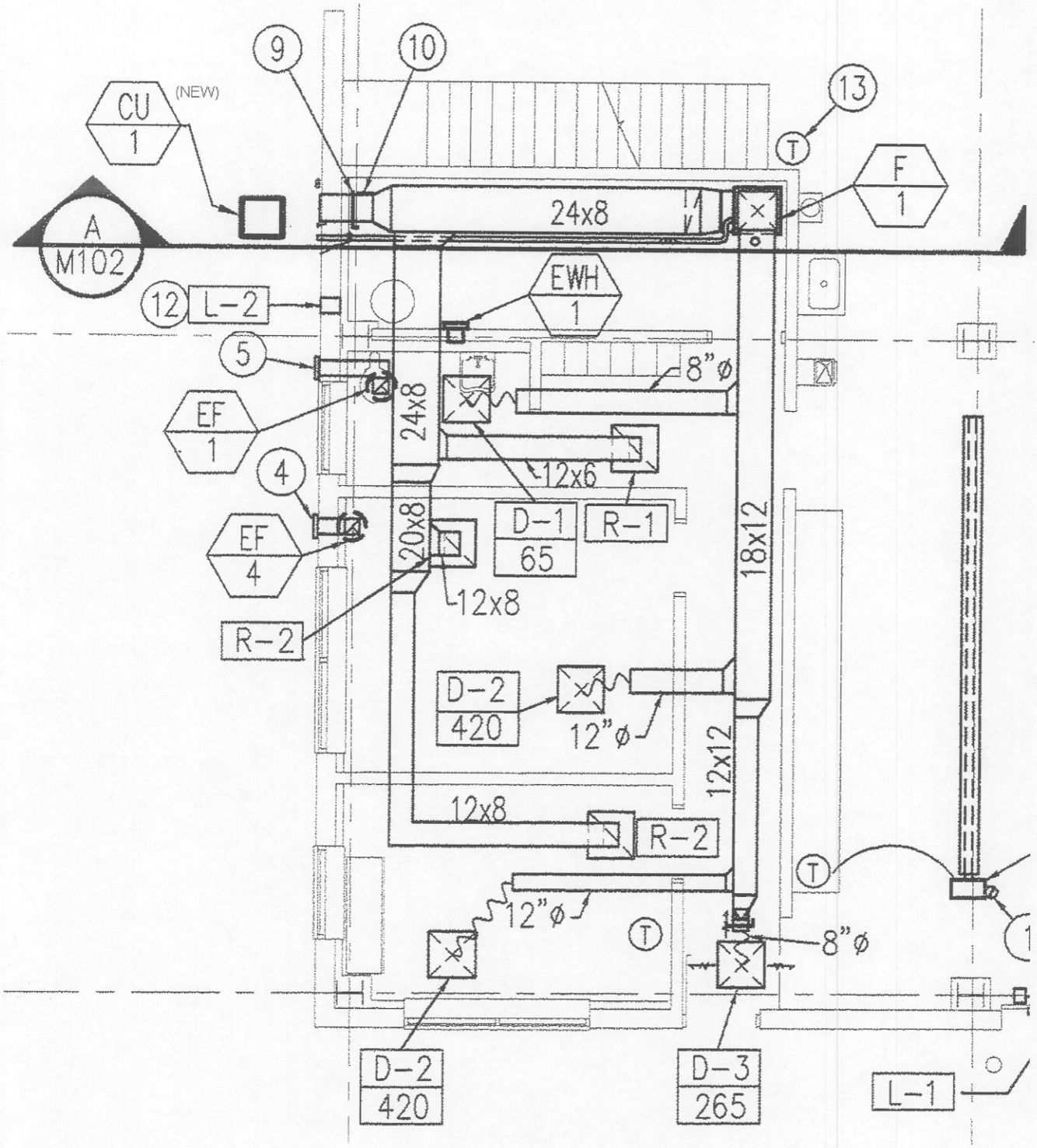

PARTIAL MECHANICAL PLAN

Escalante
Rx 810 252 024

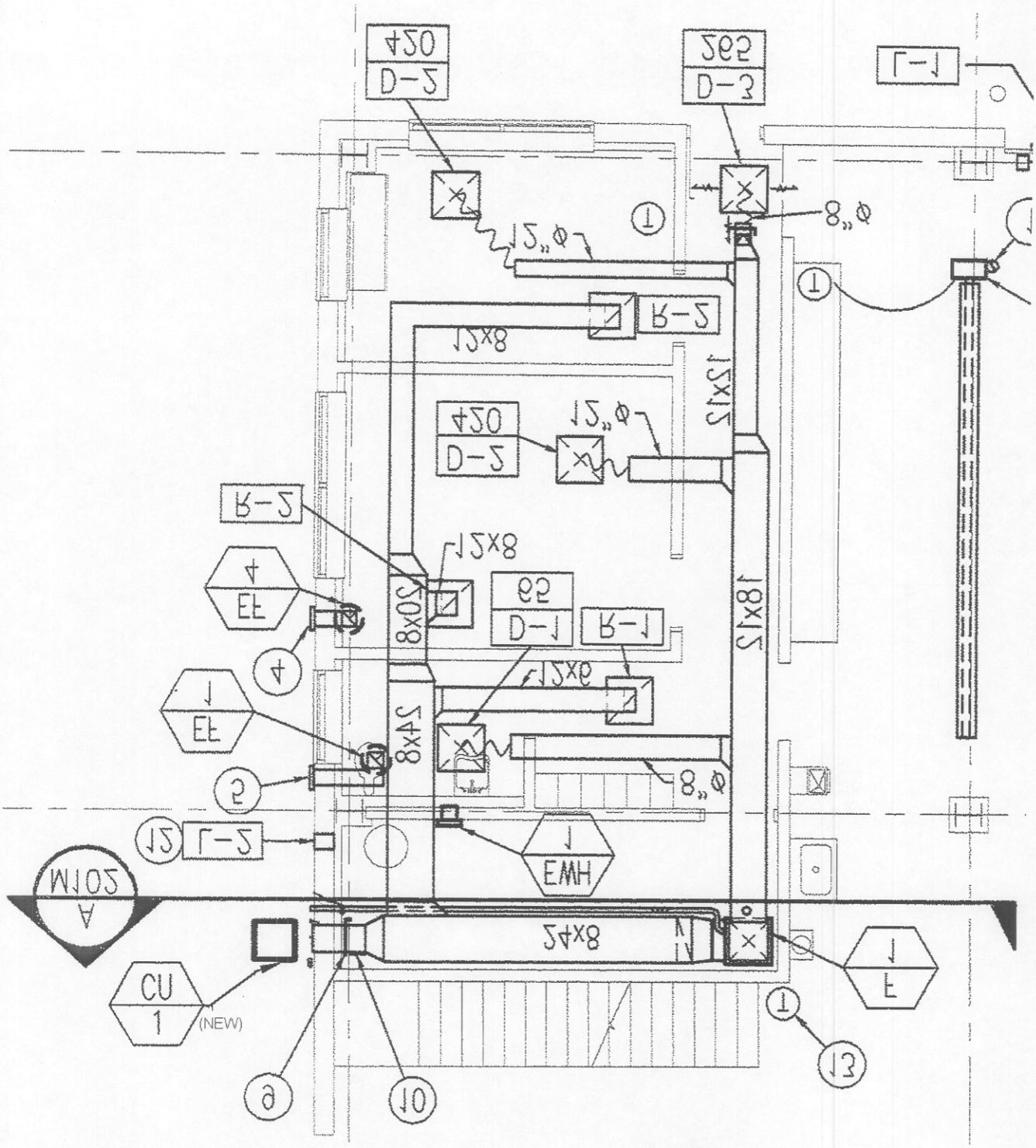

PARTIAL MECHANICAL PLAN

(ACTUAL ORIENTATION)

Escalante

Rx 810 252 024